30% Remedial Design Basis of Design Report

Appendix G
Structural Calculations

STRUCTURAL CALCULATIONS

LOWER DUWAMISH WATERWAY MIDDLE REACH

30% REMEDIAL DESIGN

PREPARED FOR: ANCHOR QEA

DATE: SEPT 19, 2025

BEI NO. 252.02

Bright Engineering Inc.
1809 7th Ave., Suite 1100 | Seattle, WA 98101 | T: 206.625.3777 | F: 206.625.1851 | www.brighteng.com | info@brighteng.com

6

LOWER DUWAMISH WATERWAY MIDDLE REACH
30% REMEDIAL DESIGN

TABLE OF CONTENTS

DESCRIPTION	PAGE NO.
Design Criteria and General Information……...	1-001 to 1-01
Wall 1 – Anchored Sheet Pile……	2-001 to 2-02
Wall 2 – Cofferdam……	2-101 to 2-13

A - DESIGN CRITERIA AND GENERAL INFORMATION

Relevant Codes and Standards

ACI 318-19 Building Code Requirements for Structural Concrete and Commentary, 2019

AISC Steel Construction Manual, Fifteenth Edition, 2017

ASCE/ SEI 7-16 Minimum Design Loads and Associated Criteria for Building and Other Structures

AWS D1.1/D1.1M: 2020 Structural Welding Code-Steel

IBC (International Building Code), 2021

SBC (Seattle Building Code), 2021

B - MATERIAL PROPERTIES

Structural Steel

Wide flange shapes: ASTM A572 or ASTM A992, Grade 50, unless otherwise noted.

Tees, channels, angels, plates & bars: ASTM A36, unless otherwise noted.

Pipe Piles: ASTM A252, Grade 3, fy = 45ksi, or API 5Lx42 or API 5Lx52

Pipe for Cofferdam: ASTM A252, fy = 50ksi

Sheet Piles: ASTM A572, Grade 50, fy = 50ksi (Type PZ or AZ)

Welding: 70XX Electrodes

STRUCTURAL GENERAL NOTES

DESIGN CRITERIA

APPLICABLE BUILDING NOTES AND CODES
CITY OF SEATTLE BUILDING CODE, SBC 2021 EDITION
INTERNATIONAL BUILDING CODE, IBC 2021 EDITION, EXCEPT WHERE OTHER CODES ARE MORE RESTRICTIVE.

OUTFALLS AND STRUCTURE PROTECTION

ALL OUTFALLS OR STRUCTURES NEAR DREDGING OR EXCAVATION SHALL BE PROTECTED PRIOR TO START OF WORK.

FOUNDATION PILING

CONSULT SOILS REPORT BY ANCHOR QEA, DATED XXXX FOR FOUNDATION DREDGING AND BACKFILL INFORMATION.

STRUCTURAL STEEL PILES
STEEL PIPE PILES – X" DIA. WITH X" MINIMUM WALL THICKNESS PER ASTM A252, GRADE 3, FY=50 KSI.

SHEET PILES – WALL 1
INTERLOCKING STEEL SHEET PILES SHALL BE NEW, CONFORMING TO ASTM A572, GRADE 50.
MINIMUM WEB OR FLANGE THICKNESS = 0.375 INCHES
MINIMUM ELASTIC SECTION MODULUS = 48.0 IN^3 /FT

DOUBLE WALL SHEET PILE WALL SYSTEM – WALL 2
INTERLOCKING STEEL SHEET PILES SHALL BE NEW, CONFORMING TO ASTM A572, GRADE 50.
MINIMUM WEB OR FLANGE THICKNESS = 0.50 INCHES
MINIMUM ELASTIC SECTION MODULUS = 48.0 IN^3 /FT

SHEET PILE INTERLOCKS SHALL BE WATERTIGHT TO THE PILE DEPTH INDICATED ON THE PLANS.

WATERSTOP:
A) LIQUID SEAL – AKILA SEALING SYSTEM BY ARCELORMITTAL.
B) REPAIR STRING – ULTRASEAL KM BY ADEKA.
C) REPAIR CAULK – ULTRASEAL P–201 BY ADEKA.
D) OR APPROVED EQUAL.

SUBMITTALS:
1. TYPE, SIZE AND MATERIAL PROPERTIES OF SHEET PILE.
2. WATERSTOP MANUFACTURER'S DATA SHEETS.
3. SHOP DRAWING SHOWING PILING PLAN AND WELDING DETAILS.
4. EQUIPMENT, MEANS AND METHODS OF PILE AND WATERPROOFING INSTALLATION AND REPAIR.

STRUCTURAL STEEL
PLATES AND BARS SHALL BE NEW AND CONFORM TO ASTM A572, GRADE 50.

WELDING
ALL WELDING SHALL CONFORM TO AWS D1.1 WELDING CODE. MINIMUM SIZE WELDS $\frac{3}{16}$" CONTINUOUS FILLET. WELDING ELECTRODES SHALL BE 70XX SERIES CONFORMING TO ANSI/AWS D1.1 TABLE 3.1 AND ELECTRODE SPECIFICATION AWS A5. WELDING SHALL BE CONDUCTED BY WABO CERTIFIED WELDER.

PAINTING
STRUCTURAL STEEL SHALL BE COATED IN CONFORMANCE WITH SPECIFICATIONS.

CONCRETE

ALL DETAILING, FABRICATION, AND ERECTION OF REINFORCING BARS, UNLESS OTHERWISE NOTED, SHALL BE IN ACCORDANCE WITH MANUAL OF STANDARD PRACTICE FOR DETAILING REINFORCED CONCRETE STRUCTURES ACI 315, LATEST EDITION. CONCRETE CONSTRUCTION SHALL CONFORM TO ACI 318 BUILDING CODE, LATEST EDITION.

DESIGN STRENGTH
UNDERWATER CEMENT GROUT SHALL CONFORM TO ASTM C1107 AND CRD–C–621 $F'C$=5000 PSI AT 28 DAYS.

REINFORCING STEEL SHALL BE IN ACCORDANCE WITH ASTM A615, GRADE 60.

MISCELLANEOUS

SUBMIT ALL REQUIRED SHOP DRAWINGS AND RECEIVE THEIR SATISFACTORY REVIEW FROM THE PROJECT REPRESENTATIVE PRIOR TO FABRICATION.

COORDINATE AND VERIFY ALL DIMENSIONS WITH GENERAL AND CIVIL DRAWINGS AND CONDITIONS AT THE PROJECT SITE PRIOR TO STARTING WORK, AND NOTIFY THE PROJECT REPRESENTATIVE IMMEDIATELY OF ANY DISCREPANCIES.

BACKGROUND AND EXISTING STRUCTURES ON THESE DRAWINGS INDICATE THE LATEST INFORMATION AVAILABLE. CONTRACTOR SHALL LOCATE AND POTHOLE EXISTING UTILITIES ALONG THE WALL ALIGNMENTS PRIOR TO DRIVING SHEET PILES.

PROVIDE TEMPORARY ERECTION BRACING AND SHORING AS REQUIRED FOR STABILITY OF THE STRUCTURE AND ADJACENT STRUCTURES, DURING ALL PHASES OF CONSTRUCTION. REFER TO PROJECT SPECIFICATIONS FOR INFORMATION NOT CONTAINED IN THESE GENERAL NOTES.

VAULT SERIAL #	DATE	MARK	NATURE REVISIONS	MADE OK'D REV'D

C:\Users\abright\Downloads\To Send to BID – 2025.09.17\To Send To BID – 2025.09.17_SHEETS\S2B-S002-ANO20014.dwg
ABright Sep-22-25 7:37am

30% SUBMITTAL (NOT FOR CONSTRUCTION)

DAVID EVANS AND ASSOCIATES INC.
14432 SE Eastgate Way, Suite 400
Bellevue Washington 98007
Phone: 425.519.6500

APPROVED FOR ADVERTISING
FAS PURCHASING AND CONTRACTING DIRECTOR
SEATTLE, WASHINGTON 20
BY: ..... FAS PURCHASING AND CONTRACTING DIRECTOR

INITIALS AND DATE	INITIALS AND DATE
DESIGNED XXX	REVIEWED:
CHECKED XXX	DES. CONST. SDOT PROJ. MGR.
DRAWN XXX	RECEIVED
CHECKED XXX	REVISED AS BUILT
ALL WORK SHALL BE DONE IN ACCORDANCE WITH THE CITY OF SEATTLE STANDARD PLANS AND SPECIFICATIONS AND OTHER DOCUMENTS CALLED FOR IN SECTION 0–02.2 OF THE PROJECT MANUAL.	

Seattle Public Utilities
ORDINANCE NO. PW NO.
SCALE: AS NOTED

STRUCTURAL GENERAL NOTES

LOWER DUWAMISH WATERWAY – 30% REMEDIAL DESIGN

JOB PC CO
VPI #
S–002
SHEET – – – – OF ?

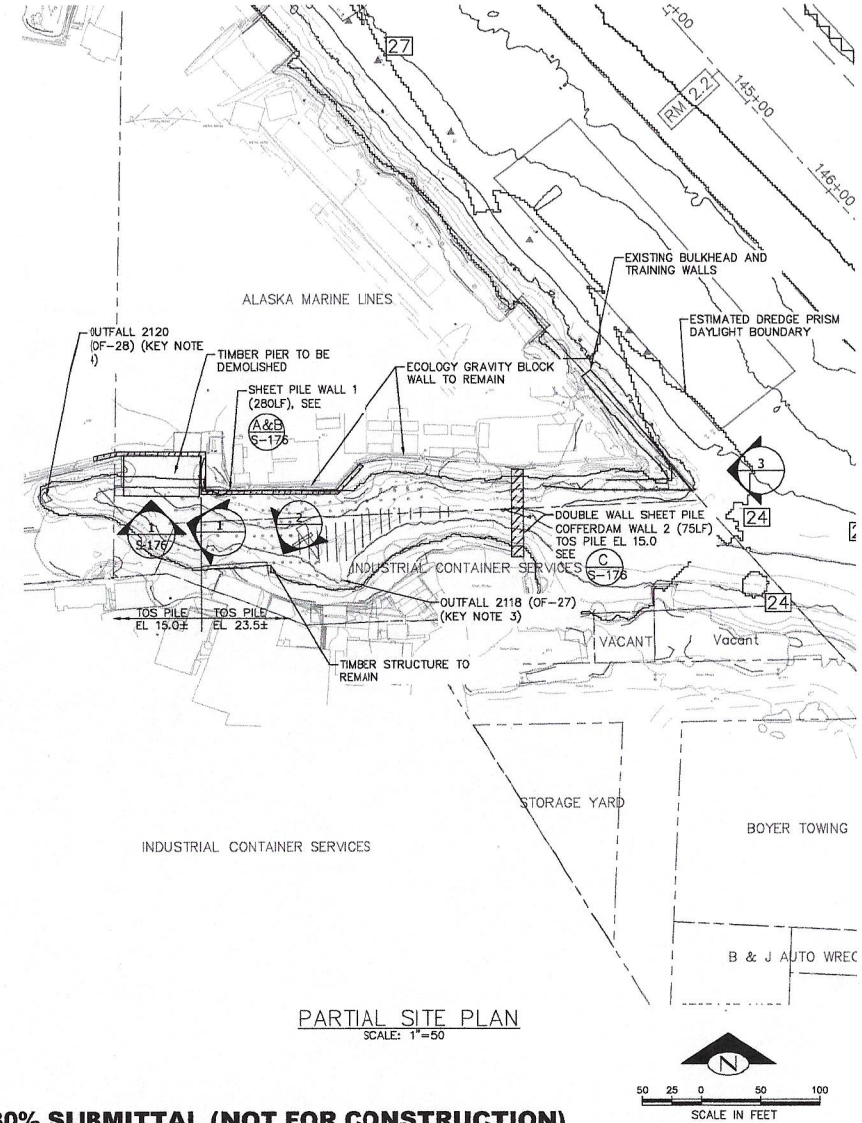

PARTIAL SITE PLAN
SCALE: 1"=50

GENERAL NOTES

1. EXISTING TOPOGRAPHY, STRUCTURES, AND SITE FEATURES ARE SHOWN SCREENED AND/OR LIGHT-LINED AND ARE INTENDED FOR REFERENCE ONLY. NEW GRADES FOR THIS CONTRACT, STRUCTURES, AND SITE FEATURES, AND EXISTING STRUCTURES AFFECTED BY DREDGING ARE SHOWN HEAVY-LINED EXCEPT WHERE NOTED OTHERWISE ON THE DRAWING.

KEY NOTES

(1) FOR DREDGING OFFSET AND LIMITS, CUT SLOPE AND RESTORATION, SEE CIVIL DRAWINGS.

(2) DO NOT MOOR OR OTHERWISE IMPOSE LATERAL LOADS TO THE INLET STRUCTURE

(3) PRIOR TO STARTING WORK DIVERT OUTFALL 2120 AND OUTFALL 2118

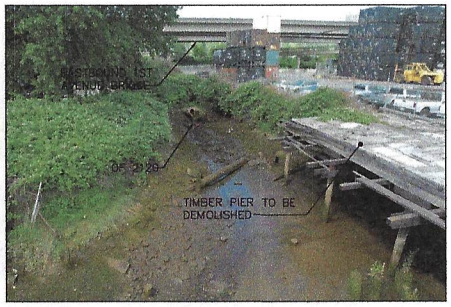

TIMBER PIER

PHOTO 1
SCALE: NONE

BUILDING

PHOTO 2
SCALE: NONE

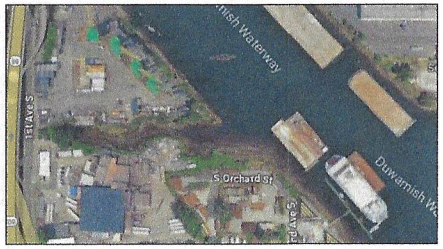

GOOGLE MAP VIEW
SCALE: NONE

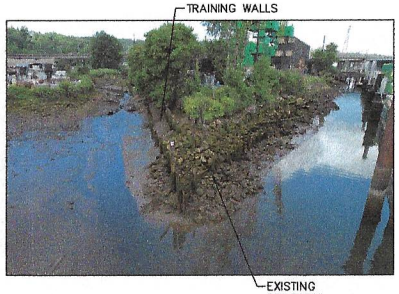

PHOTO 3
SCALE: NONE

30% SUBMITTAL (NOT FOR CONSTRUCTION)

INLET AT RM 2.2W PARTIAL PLAN

DAVID EVANS AND ASSOCIATES INC.
14432 SE Eastgate Way, Suite 400
Bellevue Washington 98007
Phone: 425.519.6500

APPROVED FOR ADVERTISING
FAS PURCHASING AND CONTRACTING DIRECTOR
SEATTLE, WASHINGTON 20
BY: FAS PURCHASING AND CONTRACTING DIRECTOR

INITIALS AND DATE	INITIALS AND DATE
DESIGNED XXX	REVIEWED: DES. CONST. SDOT PROJ. MGR.
CHECKED XXX	
DRAWN XXX	RECEIVED
CHECKED XXX	REVISED AS BUILT

ALL WORK SHALL BE DONE IN ACCORDANCE WITH THE CITY OF SEATTLE STANDARD PLANS AND SPECIFICATIONS AND OTHER DOCUMENTS CALLED FOR IN SECTION 1-05.3 OF THE PROJECT MANUAL.

Seattle Public Utilities
ORDINANCE NO. PW NO.
SCALE: AS NOTED

LOWER DUWAMISH WATERWAY – 30% REMEDIAL DESIGN

JOB PC CO
VPI #
S-175
SHEET — — OF — ?

VAULT SERIAL #	DATE	MARK	NATURE OF REVISIONS	MADE CHK'D	REV'D

C:\Users\abright\Downloads\To Send To BEI - 2025.09.17\To Send To BEI - 2025.09.17_SHEETS\EB-S175-ANO2014.dwg
ABright Sep 22, 2025 6:35am

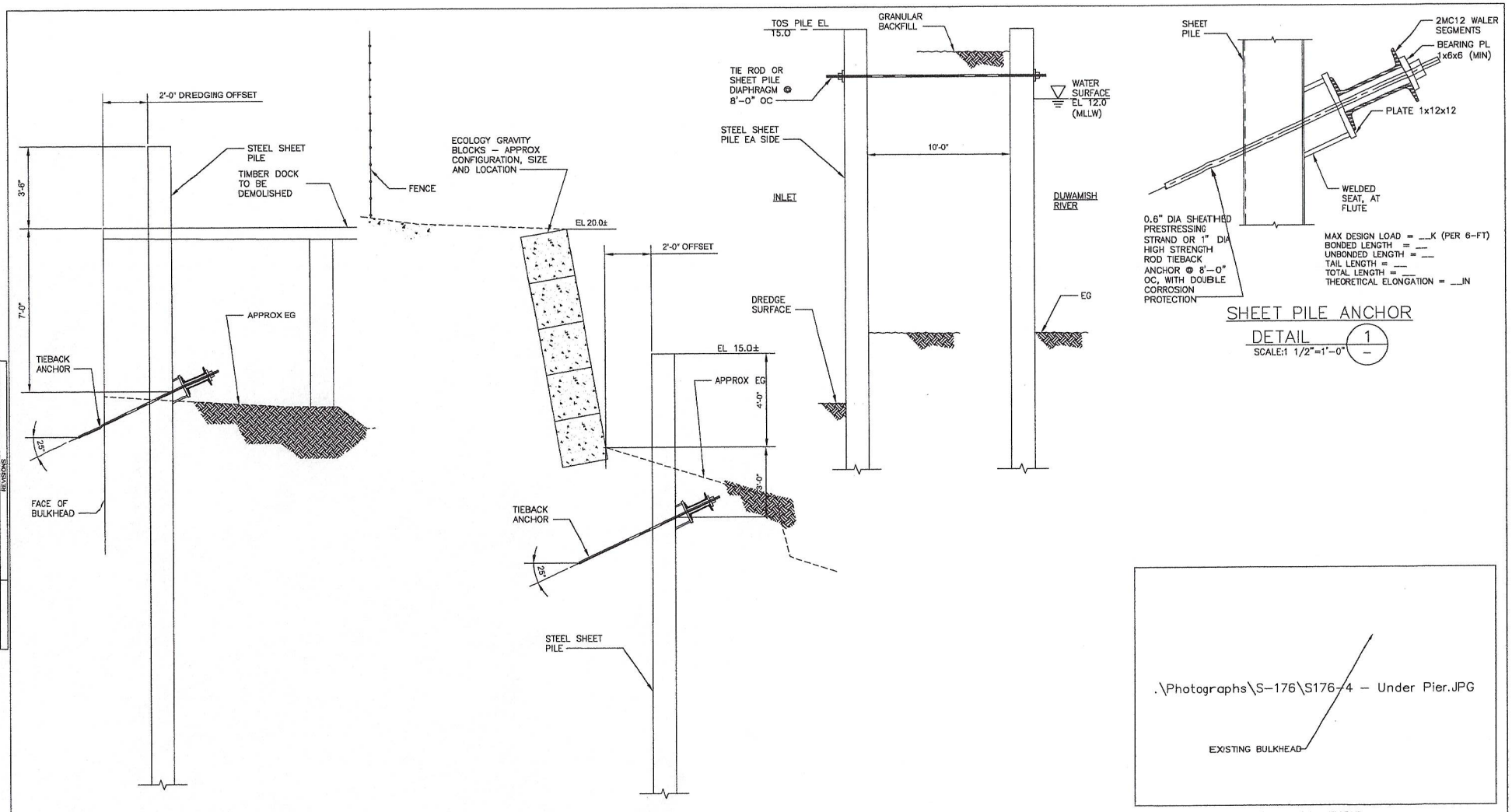

SHEET PILE ANCHOR DETAIL 1 / –
SCALE:1 1/2"=1'-0"

WALL 1 AT TIMBER DOCK
SECTION A / S-175
SCALE:1/2"=1'-0"

WALL 1 AT ECOLOGY BLOCKS
SECTION B / S-175
SCALE:1/2"=1'-0"

WALL 2-COFFERDAM
SECTION C / S-175
SCALE:1/2"=1'-0"

TIMBER PIER PHOTO 1 / S-175
SCALE:NONE

INLET AT RM 2.2W SECTIONS AND DETAILS

30% SUBMITTAL (NOT FOR CONSTRUCTION)

DAVID EVANS AND ASSOCIATES INC.
14432 SE Eastgate Way, Suite 400
Bellevue Washington 98007
Phone: 425.519.6500

APPROVED FOR ADVERTISING
FAS PURCHASING AND CONTRACTING DIRECTOR
SEATTLE, WASHINGTON 20
BY:
FAS PURCHASING AND CONTRACTING DIRECTOR

INITIALS AND DATE	INITIALS AND DATE
DESIGNED XXX	REVIEWED: DES. CONST. SDOT PROJ. MGR.
CHECKED XXX	
DRAWN XXX	RECEIVED
CHECKED XXX	REVISED AS BUILT

ALL WORK SHALL BE DONE IN ACCORDANCE WITH THE CITY OF SEATTLE STANDARD PLANS AND SPECIFICATIONS AND OTHER DOCUMENTS CALLED FOR IN SECTION 0-02.3 OF THE PROJECT MANUAL.

Seattle Public Utilities
ORDINANCE NO. PW NO.
SCALE: AS NOTED

LOWER DUWAMISH WATERWAY – 30% REMEDIAL DESIGN

JOB PC CO
VPI #
S-176
SHEET ___ OF ?

VAULT SERIAL #	DATE	MARK	NATURE REVISIONS	MADE	CHK'D	REV'D

C:\Users\jbright\Downloads\To Send To BEI - 2025.09.17\To Send To BEI - 2025.09.17_SHEETS\EB-S176-ANCE0014.dwg
ABright Sep-22-25 6:55am

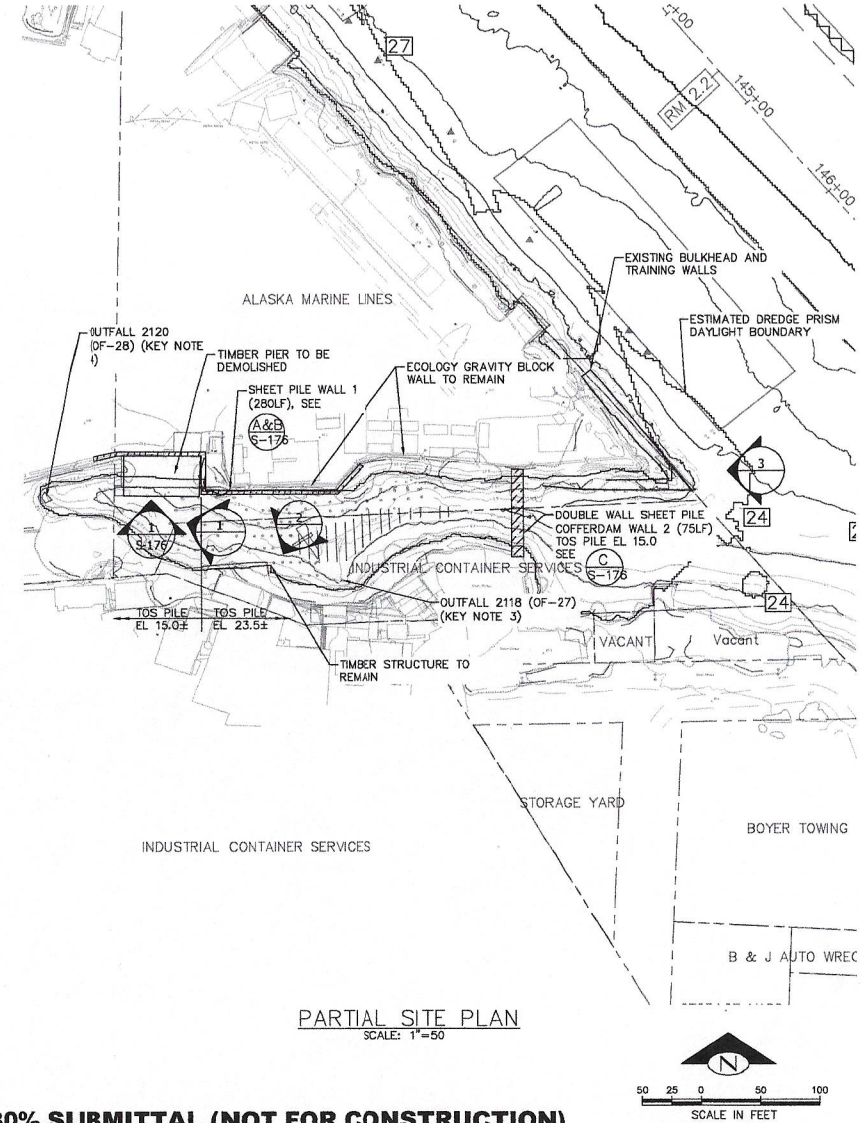

PARTIAL SITE PLAN
SCALE: 1"=50

GENERAL NOTES

1. EXISTING TOPOGRAPHY, STRUCTURES, AND SITE FEATURES ARE SHOWN SCREENED AND/OR LIGHT-LINED AND ARE INTENDED FOR REFERENCE ONLY. NEW GRADES FOR THIS CONTRACT, STRUCTURES, AND SITE FEATURES, AND EXISTING STRUCTURES AFFECTED BY DREDGING ARE SHOWN HEAVY-LINED EXCEPT WHERE NOTED OTHERWISE ON THE DRAWING.

KEY NOTES

(1) FOR DREDGING OFFSET AND LIMITS, CUT SLOPE AND RESTORATION, SEE CIVIL DRAWINGS.

(2) DO NOT MOOR OR OTHERWISE IMPOSE LATERAL LOADS TO THE INLET STRUCTURE

(3) PRIOR TO STARTING WORK DIVERT OUTFALL 2120 AND OUTFALL 2118

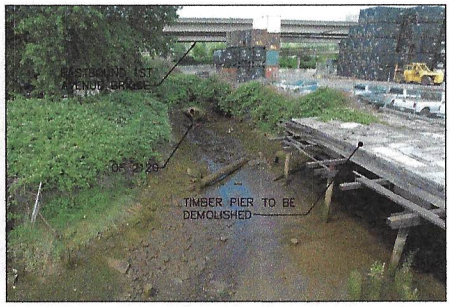

TIMBER PIER

PHOTO 1
SCALE: NONE

BUILDING

PHOTO 2
SCALE: NONE

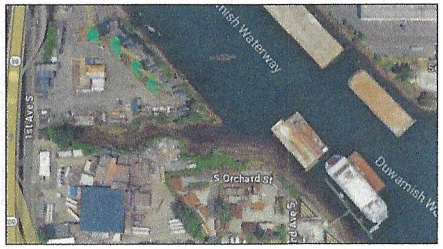

GOOGLE MAP VIEW
SCALE: NONE

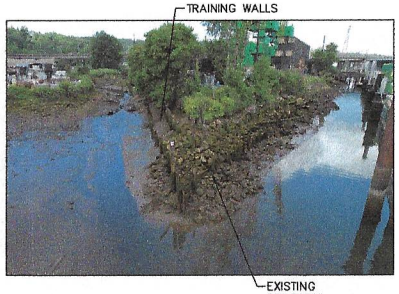

PHOTO 3
SCALE: NONE

30% SUBMITTAL (NOT FOR CONSTRUCTION)

INLET AT RM 2.2W PARTIAL PLAN

DAVID EVANS AND ASSOCIATES INC.
14432 SE Eastgate Way, Suite 400
Bellevue Washington 98007
Phone: 425.519.6500

APPROVED FOR ADVERTISING
FAS PURCHASING AND CONTRACTING DIRECTOR
SEATTLE, WASHINGTON 20
BY: FAS PURCHASING AND CONTRACTING DIRECTOR

INITIALS AND DATE	INITIALS AND DATE
DESIGNED XXX	REVIEWED: DES. CONST. SDOT PROJ. MGR.
CHECKED XXX	
DRAWN XXX	RECEIVED
CHECKED XXX	REVISED AS BUILT

ALL WORK SHALL BE DONE IN ACCORDANCE WITH THE CITY OF SEATTLE STANDARD PLANS AND SPECIFICATIONS AND OTHER DOCUMENTS CALLED FOR IN SECTION 1-05.3 OF THE PROJECT MANUAL.

Seattle Public Utilities
ORDINANCE NO. PW NO.
SCALE: AS NOTED

LOWER DUWAMISH WATERWAY – 30% REMEDIAL DESIGN

JOB PC CO
VPI #
S-175
SHEET — — OF — ?

VAULT SERIAL #	DATE	MARK	NATURE OF REVISIONS	MADE CHK'D	REV'D

C:\Users\abright\Downloads\To Send To BEI - 2025.09.17\To Send To BEI - 2025.09.17_SHEETS\EB-S175-ANO2014.dwg
ABright Sep 22, 2025 6:35am

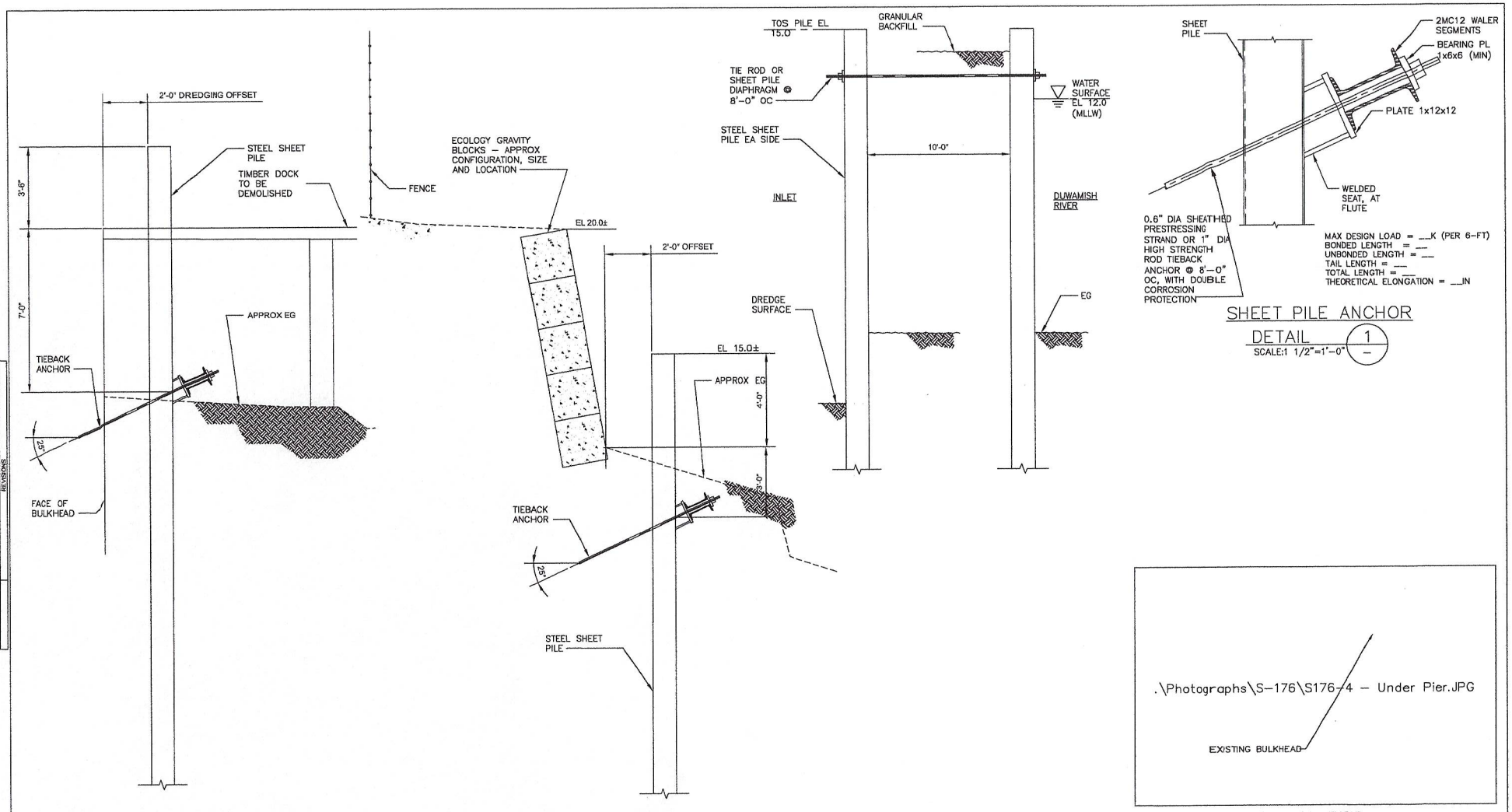

SHEET PILE ANCHOR DETAIL 1 / –
SCALE:1 1/2"=1'-0"

WALL 1 AT TIMBER DOCK
SECTION A / S-175
SCALE:1/2"=1'-0"

WALL 1 AT ECOLOGY BLOCKS
SECTION B / S-175
SCALE:1/2"=1'-0"

WALL 2-COFFERDAM
SECTION C / S-175
SCALE:1/2"=1'-0"

TIMBER PIER PHOTO 1 / S-175
SCALE:NONE

INLET AT RM 2.2W SECTIONS AND DETAILS

30% SUBMITTAL (NOT FOR CONSTRUCTION)

DAVID EVANS AND ASSOCIATES INC.
14432 SE Eastgate Way, Suite 400
Bellevue Washington 98007
Phone: 425.519.6500

APPROVED FOR ADVERTISING
FAS PURCHASING AND CONTRACTING DIRECTOR
SEATTLE, WASHINGTON 20
BY:
FAS PURCHASING AND CONTRACTING DIRECTOR

INITIALS AND DATE	INITIALS AND DATE
DESIGNED XXX	REVIEWED: DES. CONST. SDOT PROJ. MGR.
CHECKED XXX	
DRAWN XXX	RECEIVED
CHECKED XXX	REVISED AS BUILT

ALL WORK SHALL BE DONE IN ACCORDANCE WITH THE CITY OF SEATTLE STANDARD PLANS AND SPECIFICATIONS AND OTHER DOCUMENTS CALLED FOR IN SECTION 0-02.3 OF THE PROJECT MANUAL.

Seattle Public Utilities
ORDINANCE NO. PW NO.
SCALE: AS NOTED

LOWER DUWAMISH WATERWAY – 30% REMEDIAL DESIGN

JOB PC CO
VPI #
S-176
SHEET ___ OF ?

VAULT SERIAL #	DATE	MARK	NATURE REVISIONS	MADE	CHK'D	REV'D

C:\Users\jbright\Downloads\To Send To BEI - 2025.09.17\To Send To BEI - 2025.09.17_SHEETS\EB-S176-ANCE0014.dwg
ABright Sep-22-25 6:55am

C - FOUNDATION

1. Retaining Walls

Design Soil Lateral Pressures – RM 2.2W

DRAFT

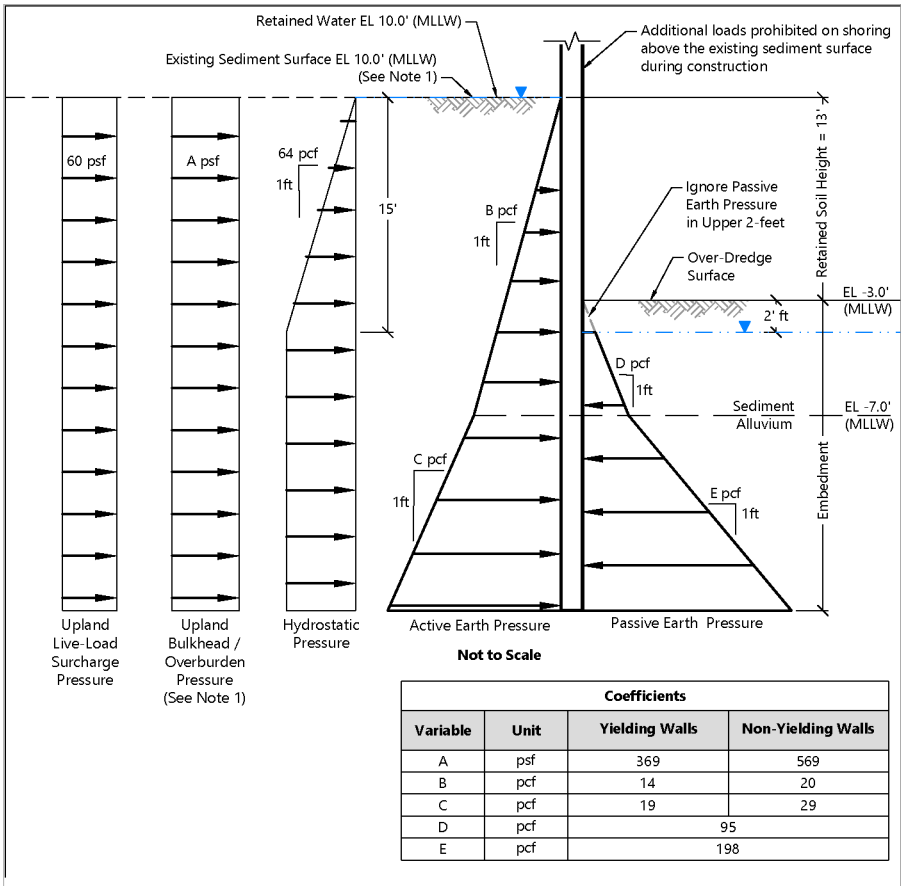

Coefficients			
Variable	**Unit**	**Yielding Walls**	**Non-Yielding Walls**
A	psf	369	569
B	pcf	14	20
C	pcf	19	29
D	pcf	95	
E	pcf	198	

NOTES:
1. The lateral earth pressure diagram assumes the temporary bulkhead is installed at the toe of an existing ecology block wall, which retains roughly 11 feet of soil above the proposed temporary bulkhead. The upland bulkhead/overburden pressure accommodates for the additional pressures induced by the existing wall and retained soil.
2. Yielding walls are those walls that will deform at least 0.001 times the height of the wall. Yield walls use active and passive earth pressure coefficients.
3. Non-yielding walls use at rest earth pressure coefficients.
4. Passive pressures are Ultimate values and do not include a factor of safety. We recommend applying a factor of safety of at least 1.5 when computing static passive pressures.
5. Ignore the contribution of the upper 2 feet of soil at the base of the wall when computing passive pressures.
6. Passive Pressure acts over 3 pile diameters.

Publish Date: 2025/08/13 2:31 PM | User: jgregg
Filepath: D:\Users\jgregg\Desktop\0067-RP-032 Lateral Earth Pressures.dwg Figure E4-1

ANCHOR QEA

Figure E4-1
Lateral Earth Pressure Diagram - RM 2.2 Temporary Bulkhead
Appendix D - Geotechnical Design Analysis
Preliminary (30%) Remedial Design Basis of Design Report for LDW Middle Reach

DRAFT

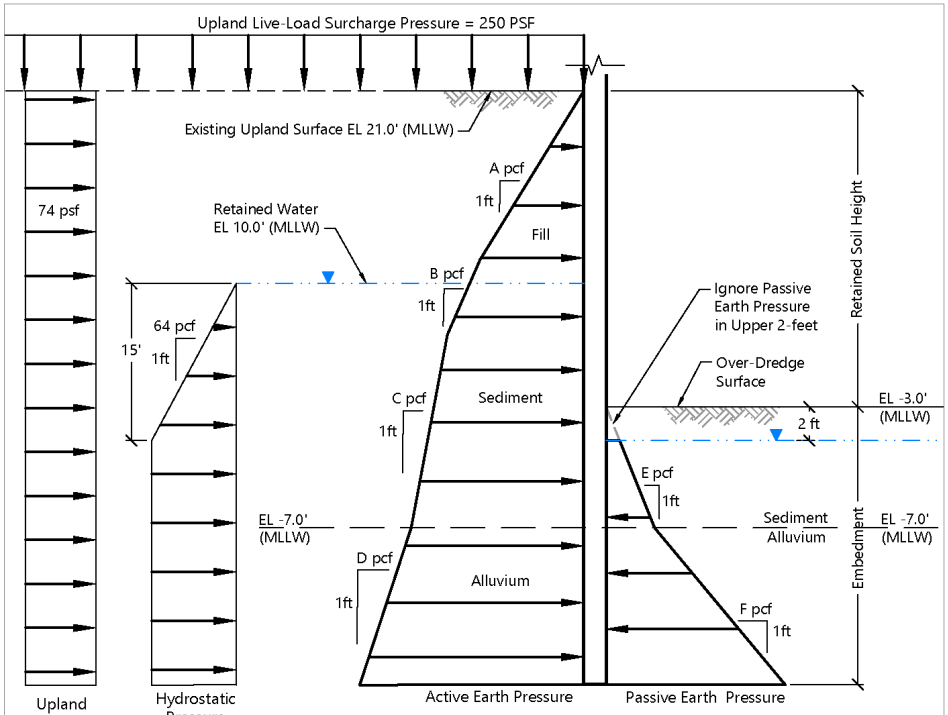

Not to Scale

Coefficients			
Variable	**Unit**	**Yielding Walls**	**Non-Yielding Walls**
A	pcf	37	57
B	pcf	18	28
C	pcf	14	20
D	pcf	19	29
E	pcf	95	
F	pcf	198	

NOTES:

1. Yielding walls are those walls that will deform at least 0.001 times the height of the wall. Yield walls use active and passive earth pressure coefficients.
2. Non-yielding walls use at rest earth pressure coefficients.
3. Passive pressures are Ultimate values and do not include a factor of safety. We recommend applying a factor of safety of at least 1.5 when computing static passive pressures.
4. Ignore the contribution of the upper 2 feet of soil at the base of the wall when computing passive pressures.
5. Passive Pressure acts over 3 pile diameters.

Publish Date: 2025/08/13 2:31 PM | User: jgregg
Filepath: D:\Users\jgregg\Desktop\0067-RP-032 Lateral Earth Pressures.dwg Figure E4-1b

ANCHOR QEA

Figure E4-1b
Lateral Earth Pressure Diagram - RM 2.2 Temporary Bulkhead

Appendix D - Geotechnical Design Analysis
Preliminary (30%) Remedial Design Basis of Design Report for LDW Middle Reach

DRAFT

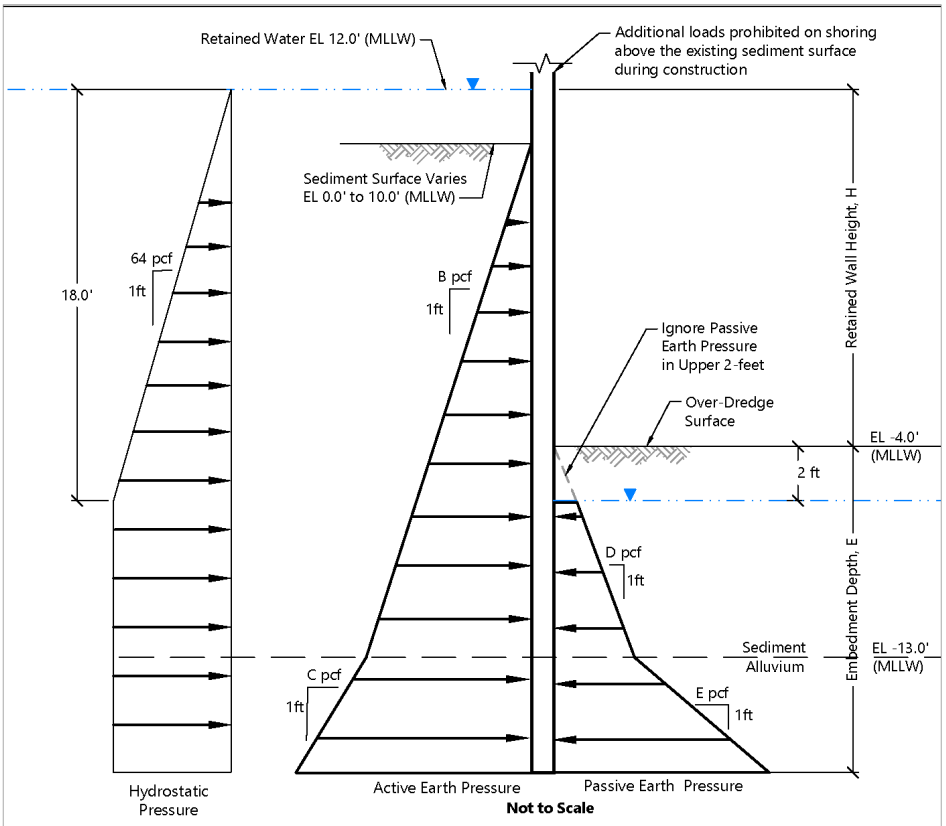

Coefficients			
Variable	**Unit**	**Yielding Walls**	**Non-Yielding Walls**
B	pcf	14	20
C	pcf	19	29
D	pcf	95	
E	pcf	198	

NOTES:

1. Yielding walls are those walls that will deform at least 0.001 times the height of the wall. Yield walls use active and passive earth pressure coefficients.
2. Non-yielding walls use at rest earth pressure coefficients.
3. Passive pressures are Ultimate values and do not include a factor of safety. We recommend applying a factor of safety of at least 1.5 when computing static passive pressures.
4. Ignore the contribution of the upper 2 feet of soil at the base of the wall when computing passive pressures.
5. Passive Pressure acts over 3 pile diameters.

Publish Date: 2025/08/13 2:27 PM | User: jgregg
Filepath: D:\Users\jgregg\Desktop\0067-RP-032 Lateral Earth Pressures.dwg Figure E4-2

ANCHOR QEA

Figure E4-2
Lateral Earth Pressure Diagram - RM 2.2 Temporary Cofferdam

Appendix D - Geotechnical Design Analysis
Preliminary (30%) Remedial Design Basis of Design Report for LDW Middle Reach

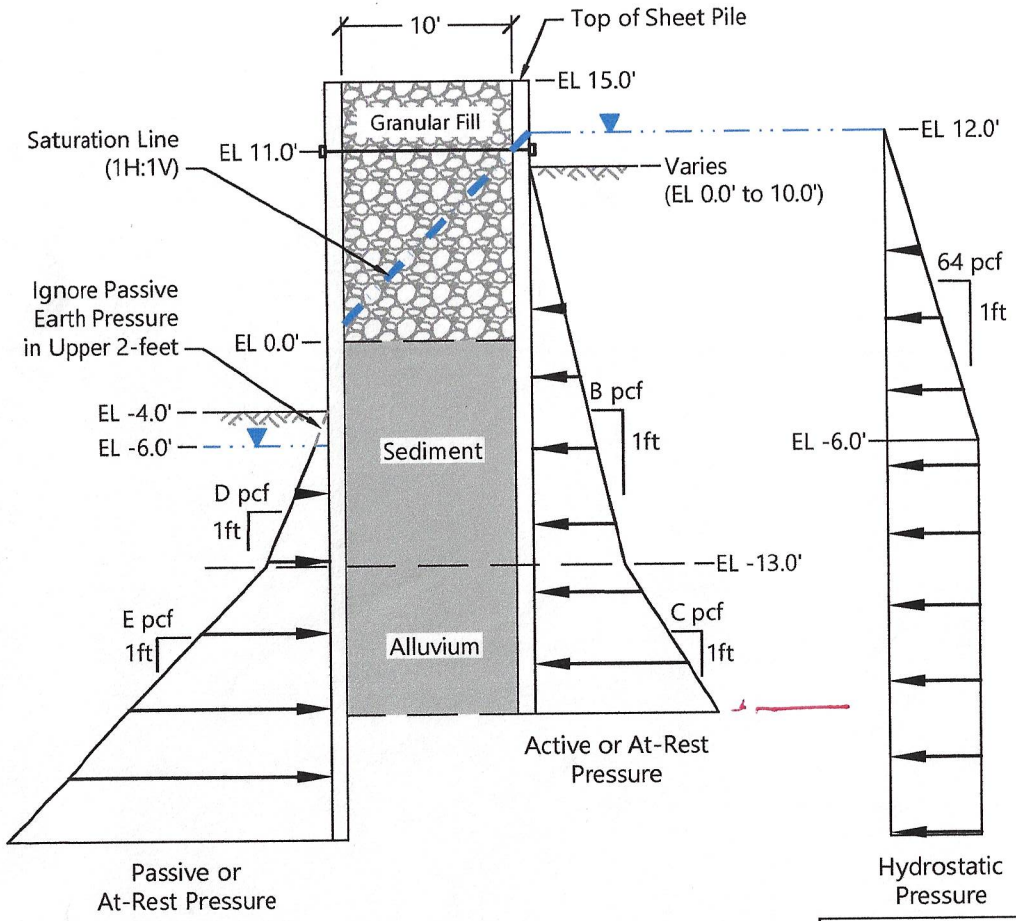

NOTES:

1. All materials between cell walls use an active earth pressure coefficient of K_A = 0.4 per USACE UFC DM 7.2, Foundation and Earth Structures.
2. Movement at the top of wall required to reach minimum active or maximum passive pressure, by tilting or lateral translation, is 0.3% of the wall height for active pressures and 3.0% of the wall height for passive pressures.
3. Non-yielding walls use at rest earth pressure coefficients.
4. Passive pressures are Ultimate values and do not include a factor of safety. We recommend applying a factor of safety of at least 1.25 when computing static passive pressures under temporary conditions.
5. Ignore the contribution of the upper 2 feet of soil at the base of the wall when computing passive pressures.
6. Passive Pressure acts over 3 pile diameters.

Exterior Cofferdam System Parameters			
Variable	**Unit**	**Yielding Walls**	**Non-Yielding Walls**
B	pcf	14	20
C	pcf	19	29
D	pcf	95	
E	pcf	198	

Interior Cofferdam System Parameters (Between Sheet Pile Walls)			
Soil Layer	**Unit Weight (pcf)**	**Active Earth Pressure Coefficient, Ka**	**Active Equivalent Fluid Pressure (pcf)**
Granular Fill - Moist	120	0.40	48
Granular Fill - Buoyant	56	0.40	22
Sediment - Buoyant	36	0.40	14
Sediment - Buoyant	61	0.40	24

Publish Date: 2025/09/18 4:32 PM | User: jgregg
Filepath: D:\Users\jgregg\Desktop\0067-RP-032 Lateral Earth Pressures.dwg | Figure S-3

ANCHOR QEA

Figure S-3
Construction Sequence - RM 2.2 Temporary Cofferdam

Additional Design Soil Lateral Pressures Notes:

a) Diagram applies to drilled or driven soldier pile walls with lagging and sheet pile walls designed as a cantilevered wall or with a single row of tieback.
b) All pressures expressed as an equivalent fluid unit weight
c) Active earth and surcharge pressures act over the pile spacing within retained wall height and over pile width or shaft diameter below bottom of excavation, whichever is lesser.
d) Passive resistance are ultimate values. Divide with a safety factor of 1.5 for allowable values.
e) Passive earth pressure acts over 3 times shaft diameter or pile width; or pile spacing, whichever is lesser.
f) 50% of active surcharge pressure act on all lagging between soldier piles.

2. Single Piles:

L-PILE Modeling Parameters

Layer	Effective Unit Weight γ' (pcf)	Friction Angle ϕ (°)	Undrained Shear Strength c_u (kip/ft^2)	P-Y Curve Model	Spring Constant; K (Es=Kx) k (pci)	Strain Factor; @50% max E ε_{50}
Recent sediment	36	27	0.08	Soft clay (Matlock)	--	0.020
Alluvium	61	32	--	Sand (Reese)	20	--

<TO BE REPLACED>

D - DESIGN ELEMENTS

1. Inlet at RM 2.2W (ST16)

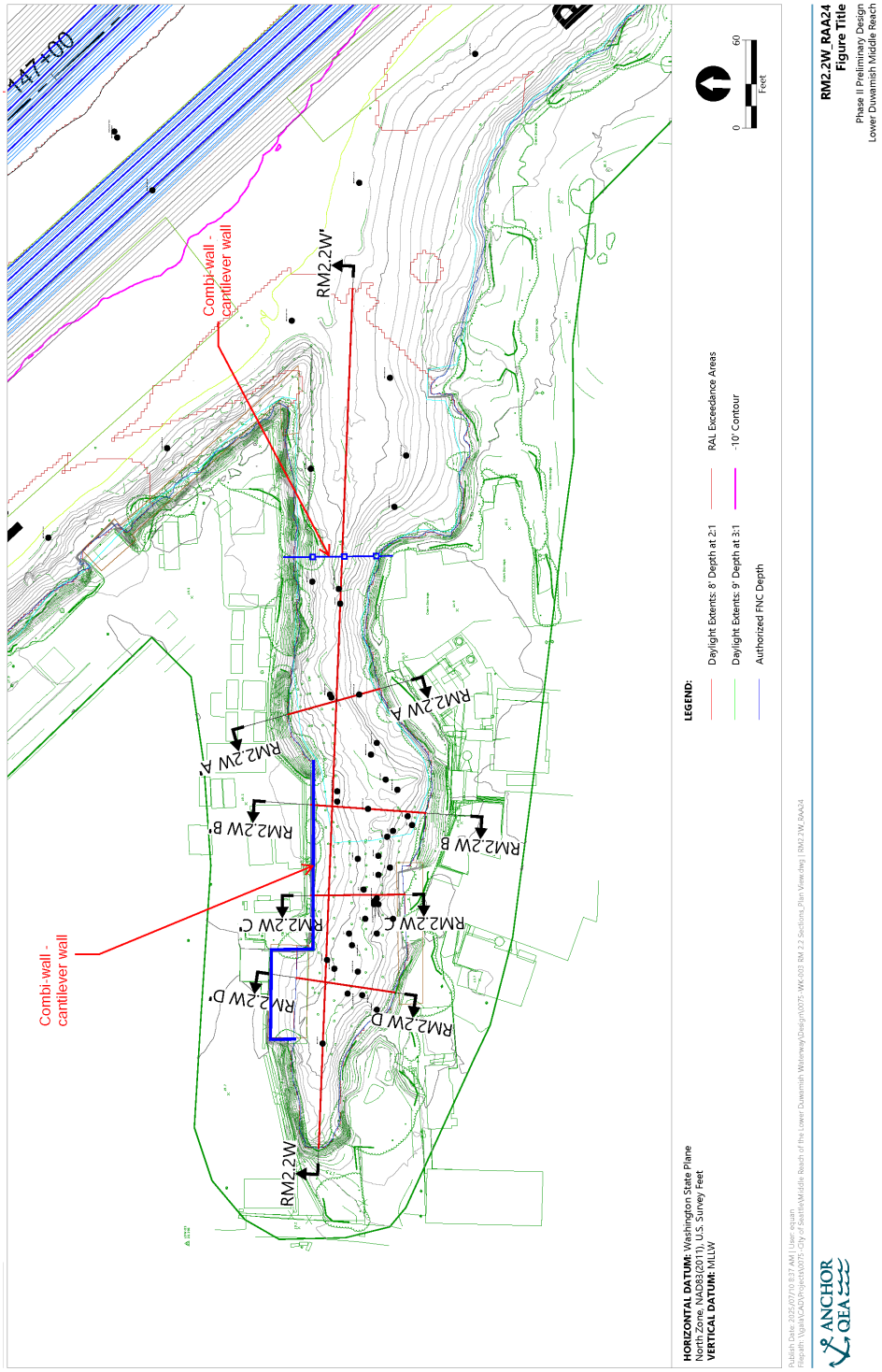

Date: July 2025 By: SL, AB BEI No. Sheet No. 6 of 6 Sheets

Subject: Engineering Services for 30% Remedial Design for Lower Duwamish Waterway Middle Reach

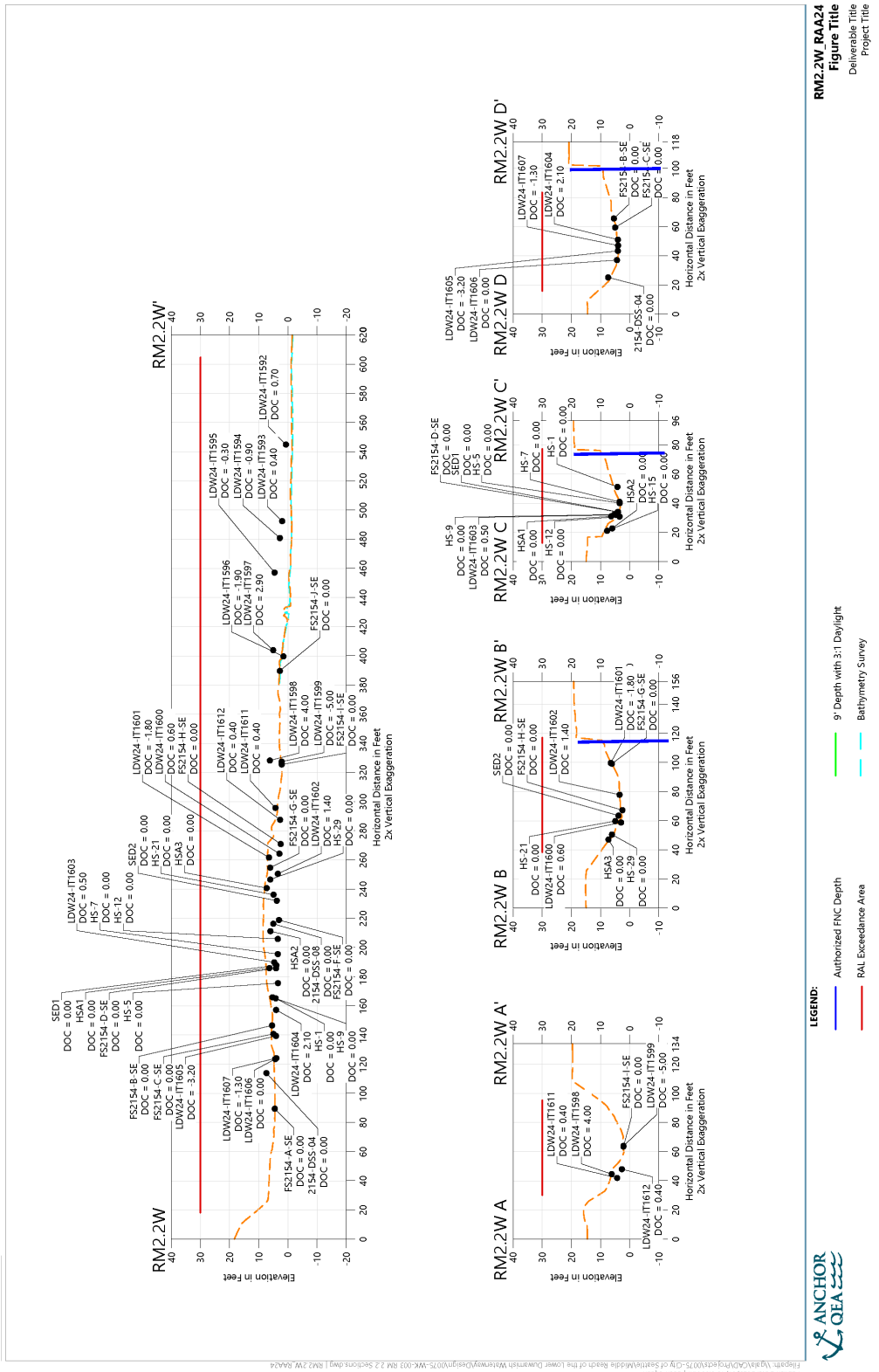

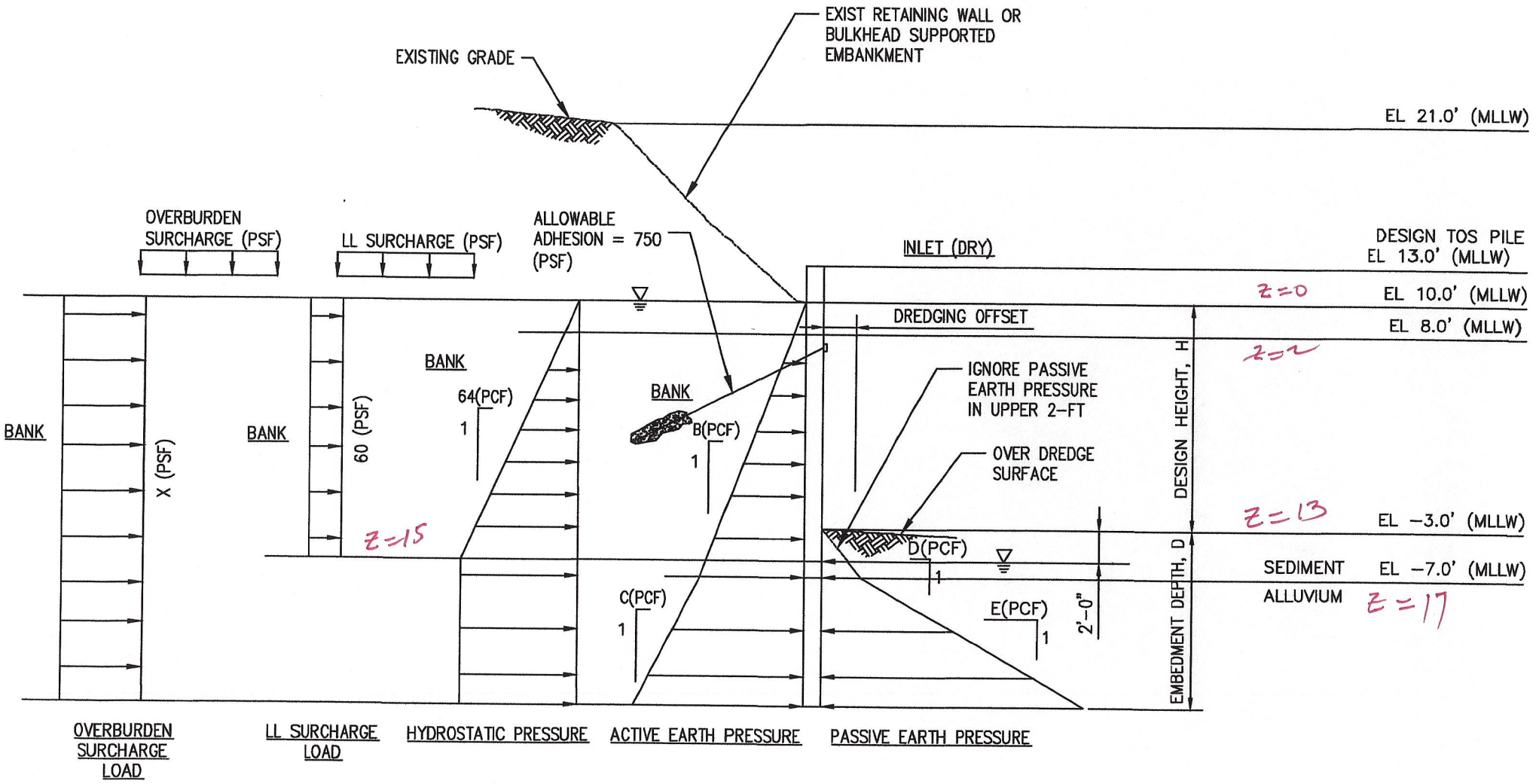

WALL 1 – BULKHEAD ALONG NORTH BANK
(REF: FIGURE E4-1)

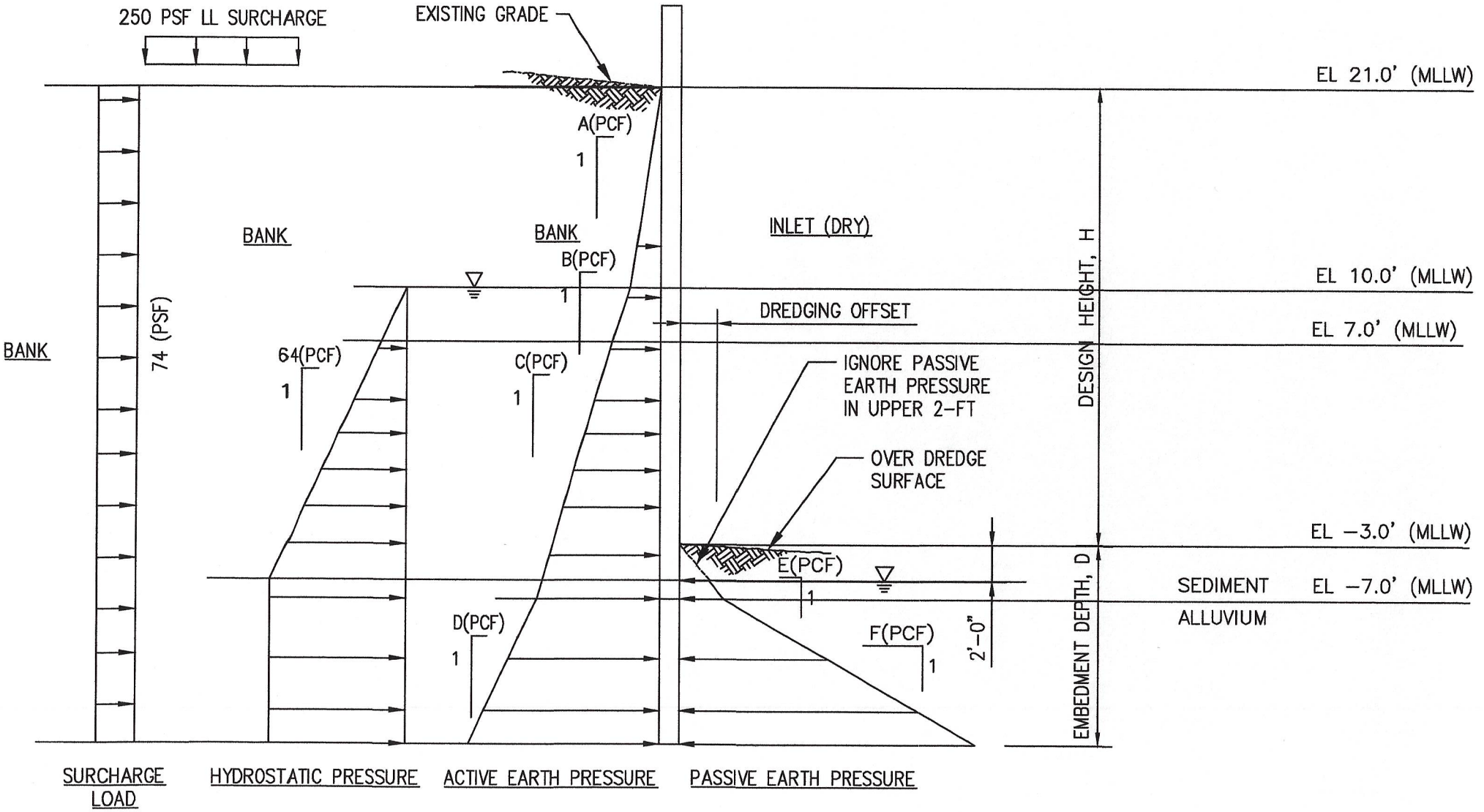

Not used

WALL 1 – BULKHEAD ALONG NORTH BANK
(REF: FIGURE E4-1B)

Wall 1 - North Bank, Figure E4-1_Rev 1

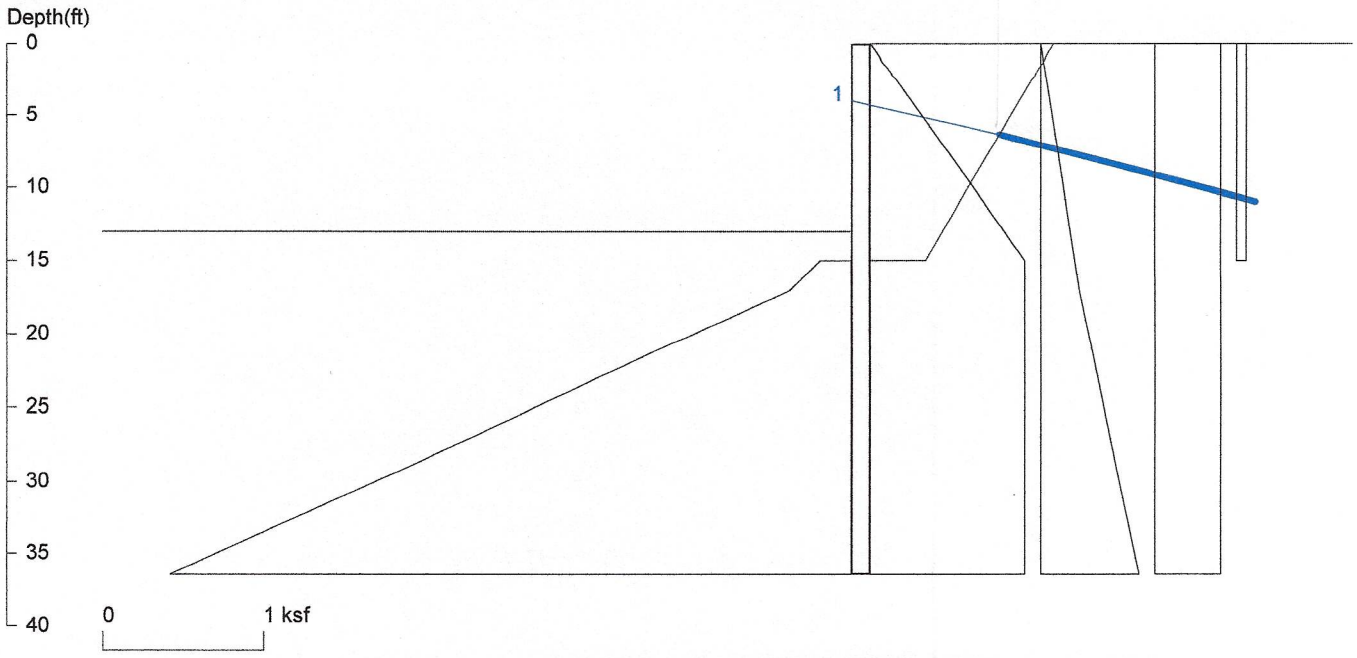

<ShoringSuite> CIVILTECH SOFTWARE USA www.civiltechsoftware.com

Licensed to 4324324234 3424343 Date: 9/6/2025
File: C:\Users\slor\Desktop\LDWMR\LDWMRBH1XT.sh8

Wall Height=13.0 Pile Diameter=1.0 Pile Spacing=1.0 Wall Type: 1. Sheet Pile

PILE LENGTH: Min. Embedment=23.45 Min. Pile Length=36.45
MOMENT IN PILE: Max. Moment=96.37 per Pile Spacing=1.0 at Depth=16.20

PILE SELECTION:
Request Min. Section Modulus = 35.0 in3/ft=1883.94 cm3/m, Fy= 50 ksi = 345 MPa, Fb/Fy=0.66
-> Piles meet Min. Section Requirements: Top Deflection is shown in (in)
6M (-0.28) CZ128 (-0.89) 6H (-0.26) AZ19 (-0.78) AZ20700 (-0.70)
H155 (-0.96) RZ11 (-0.95) PZ32 (-0.96) BZ20.7L (-0.86) CZ141 (-0.81)
CZ148 (-0.77) 4N (-0.72) AZ25 (-0.55) FSPZ25 (-0.75)

BRACE FORCE: Strut, Tieback, Plate Anchor, and Deadman

No. & Type	Depth	Angle	Space	Total F.	Horiz. F.	Vert. F.	L_free	Fixed Length
1. Tieback	4.0	15.0	6.0	108.3	104.6	28.0	9.1	91.9

UNITS: Width,Diameter,Spacing,Length,Depth,and Height - ft; Force - kip; Bond Strength and Pressure - ksf

DRIVING PRESSURES (ACTIVE, WATER, & SURCHARGE):

Z1	P1	Z2	P2	Slope
0	0	15	.96	0.064000
15	.96	100	.96	0.000000
0	0	17	.238	0.014000
17	.238	100	1.815	0.019000
0	.407	100	.407	0.000000
0	.06	15	.06	0.000000

PASSIVE PRESSURES: Pressures below will be divided by a Factor of Safety =1.25

Z1	P1	Z2	P2	Slope
15.0	0.19	17.0	0.38	0.095

17.0	0.38	100.0	16.81	0.198

ACTIVE SPACING:

No.	Z depth	Spacing
1	0.00	1.00
2	13.00	1.00

PASSIVE SPACING:

No.	Z depth	Spacing
1	15.00	1.00
2	99.00	1.00

UNITS: Width,Spacing,Diameter,Length,and Depth - ft; Force - kip; Moment - kip-ft
Friction,Bearing,and Pressure - ksf; Pres. Slope - kip/ft3; Deflection - in

Wall 1 - North Bank, Figure E4-1_Rev 1

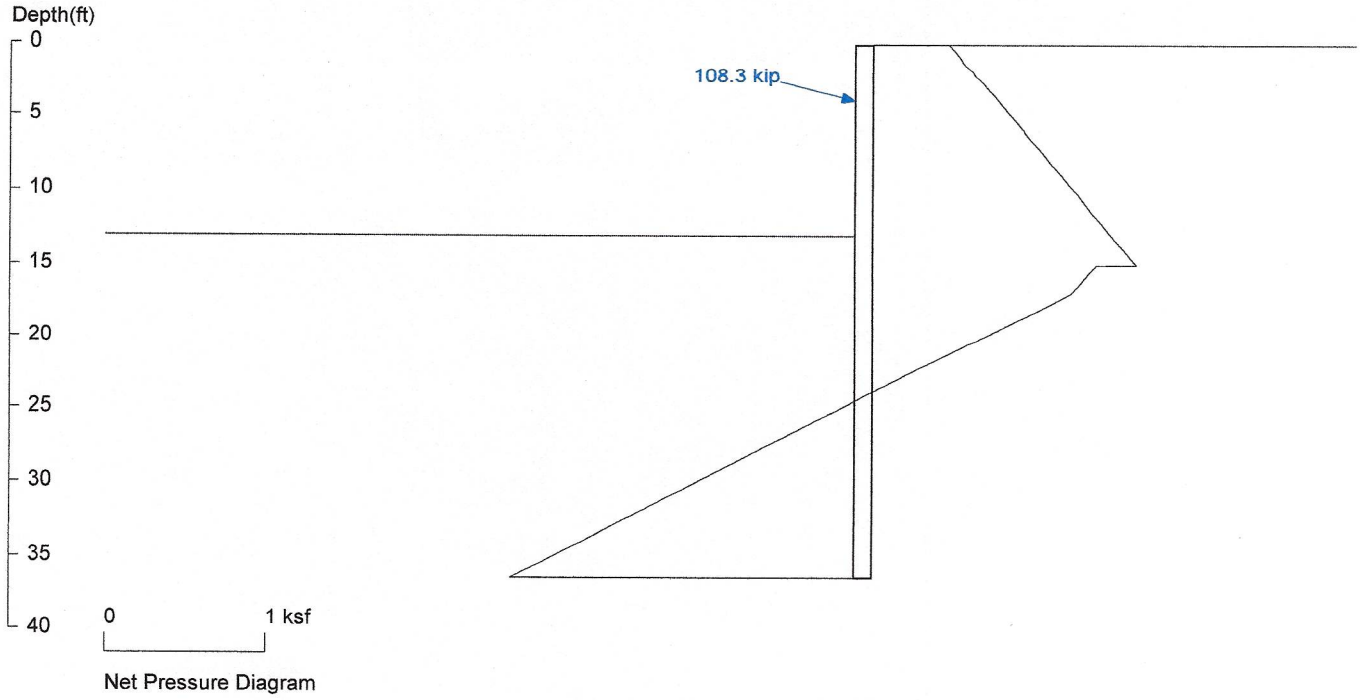

Net Pressure Diagram

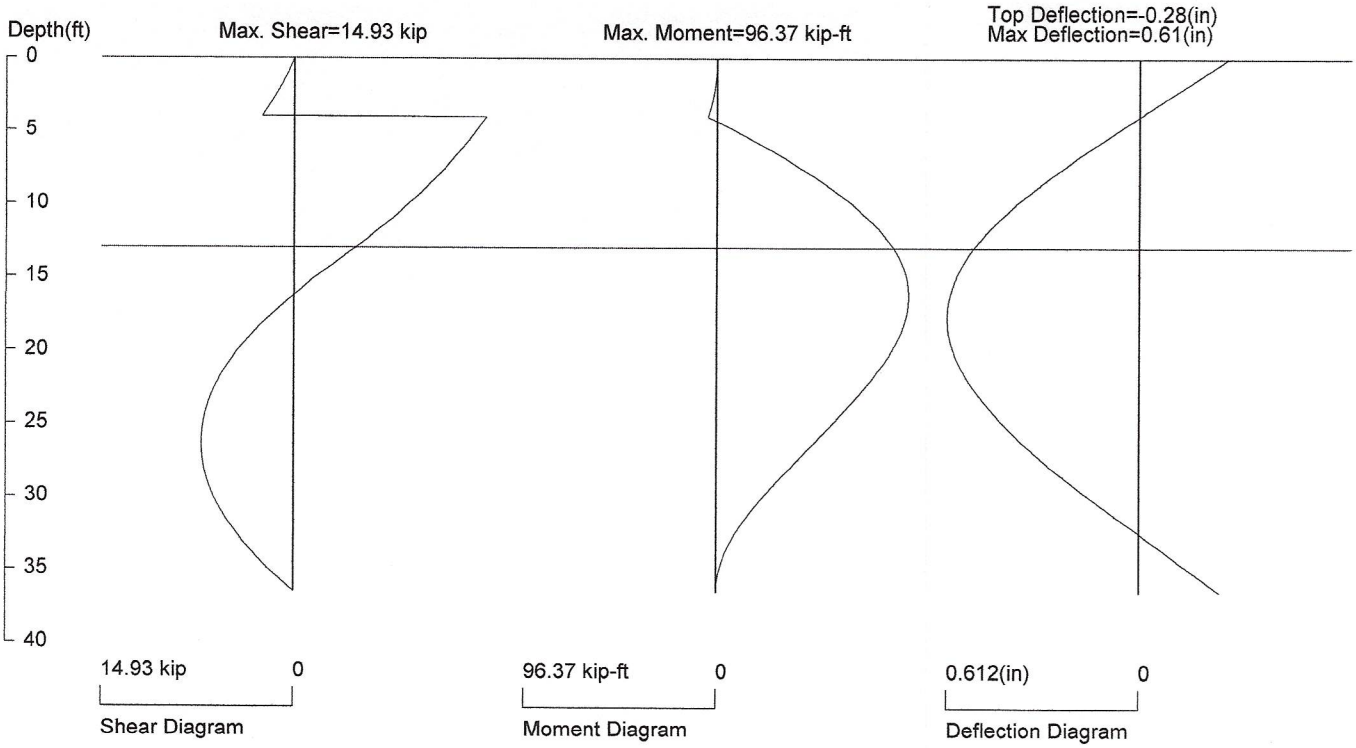

Shear Diagram | Moment Diagram | Deflection Diagram

PRESSURE, SHEAR, MOMENT, AND DEFLECTION DIAGRAMS

Based on pile spacing: 1.0 foot or meter

First Suitable Pile: 6M: E (ksi)=29000.0, I (in4)/foot=753.2

File: C:\Users\slor\Desktop\LDWMR\LDWMRBH1XT.sh8

Wall 1 - North Bank, Figure E4-1_Rev 1

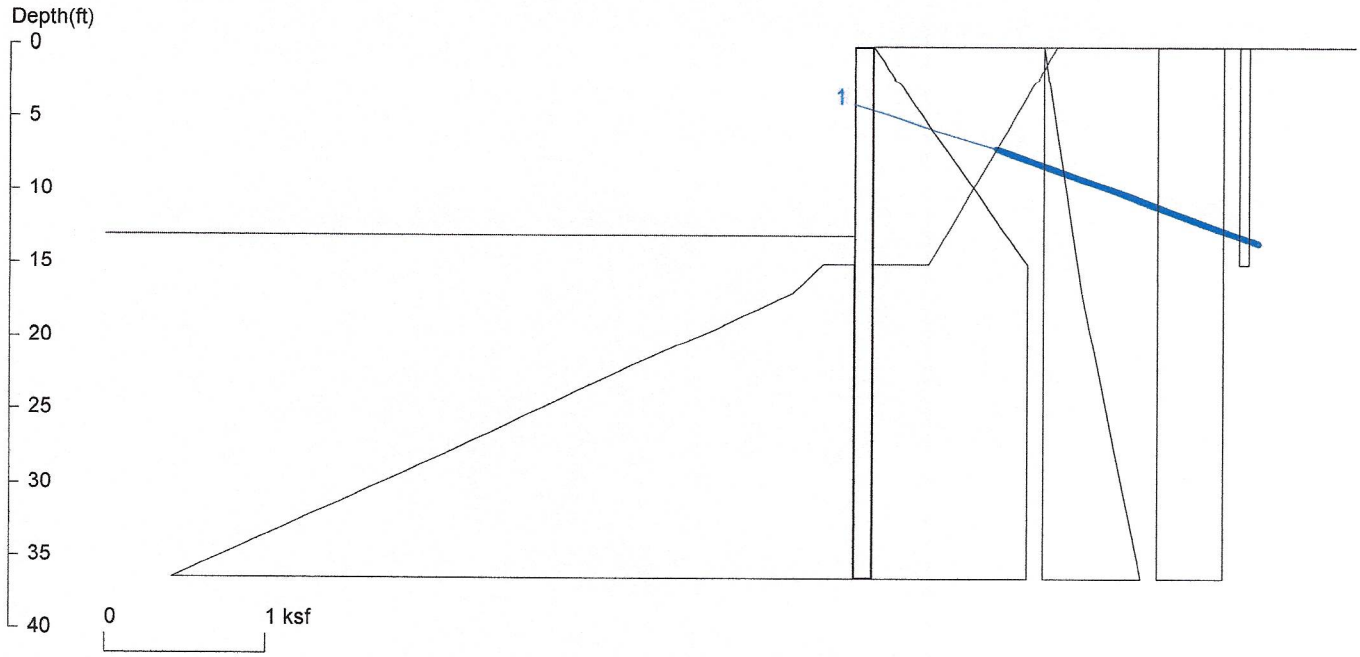

<ShoringSuite> CIVILTECH SOFTWARE USA www.civiltechsoftware.com

Licensed to 4324324234 3424343 Date: 9/6/2025
File: C:\Users\slor\Desktop\LDWMR\LDWMRBH1XT.sh8

Wall Height=13.0 Pile Diameter=1.0 Pile Spacing=1.0 Wall Type: 1. Sheet Pile

PILE LENGTH: Min. Embedment=23.45 Min. Pile Length=36.45
MOMENT IN PILE: Max. Moment=96.37 per Pile Spacing=1.0 at Depth=16.20

PILE SELECTION:
Request Min. Section Modulus = 35.0 in3/ft=1883.94 cm3/m, Fy= 50 ksi = 345 MPa, Fb/Fy=0.66
-> Piles meet Min. Section Requirements: Top Deflection is shown in (in)
6M (-0.28) CZ128 (-0.89) 6H (-0.26) AZ19 (-0.78) AZ20700 (-0.70)
H155 (-0.96) RZ11 (-0.95) PZ32 (-0.96) BZ20.7L (-0.86) CZ141 (-0.81)
CZ148 (-0.77) 4N (-0.72) AZ25 (-0.55) FSPZ25 (-0.75)

BRACE FORCE: Strut, Tieback, Plate Anchor, and Deadman

No. & Type	Depth	Angle	Space	Total F.	Horiz. F.	Vert. F.	L_free	Fixed Length
1. Tieback	4.0	20.0	6.0	111.3	104.6	38.1	8.9	94.5

UNITS: Width,Diameter,Spacing,Length,Depth,and Height - ft; Force - kip; Bond Strength and Pressure - ksf

DRIVING PRESSURES (ACTIVE, WATER, & SURCHARGE):

Z1	P1	Z2	P2	Slope
0	0	15	.96	0.064000
15	.96	100	.96	0.000000
0	0	17	.238	0.014000
17	.238	100	1.815	0.019000
0	.407	100	.407	0.000000
0	.06	15	.06	0.000000

PASSIVE PRESSURES: Pressures below will be divided by a Factor of Safety =1.25

Z1	P1	Z2	P2	Slope
15.0	0.19	17.0	0.38	0.095

17.0	0.38	100.0	16.81	0.198

ACTIVE SPACING:

No.	Z depth	Spacing
1	0.00	1.00
2	13.00	1.00

PASSIVE SPACING:

No.	Z depth	Spacing
1	15.00	1.00
2	99.00	1.00

UNITS: Width,Spacing,Diameter,Length,and Depth - ft; Force - kip; Moment - kip-ft
Friction,Bearing,and Pressure - ksf; Pres. Slope - kip/ft3; Deflection - in

Wall 1 - North Bank, Figure E4-1_Rev 1

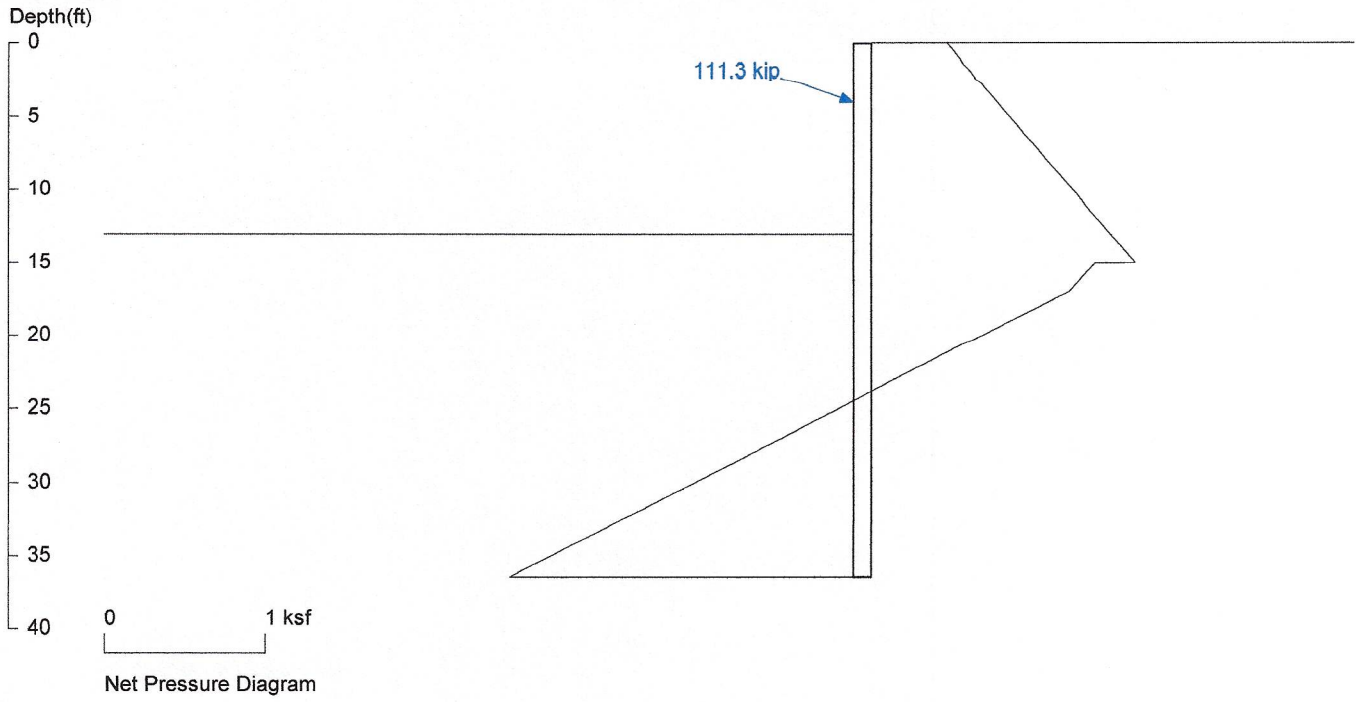

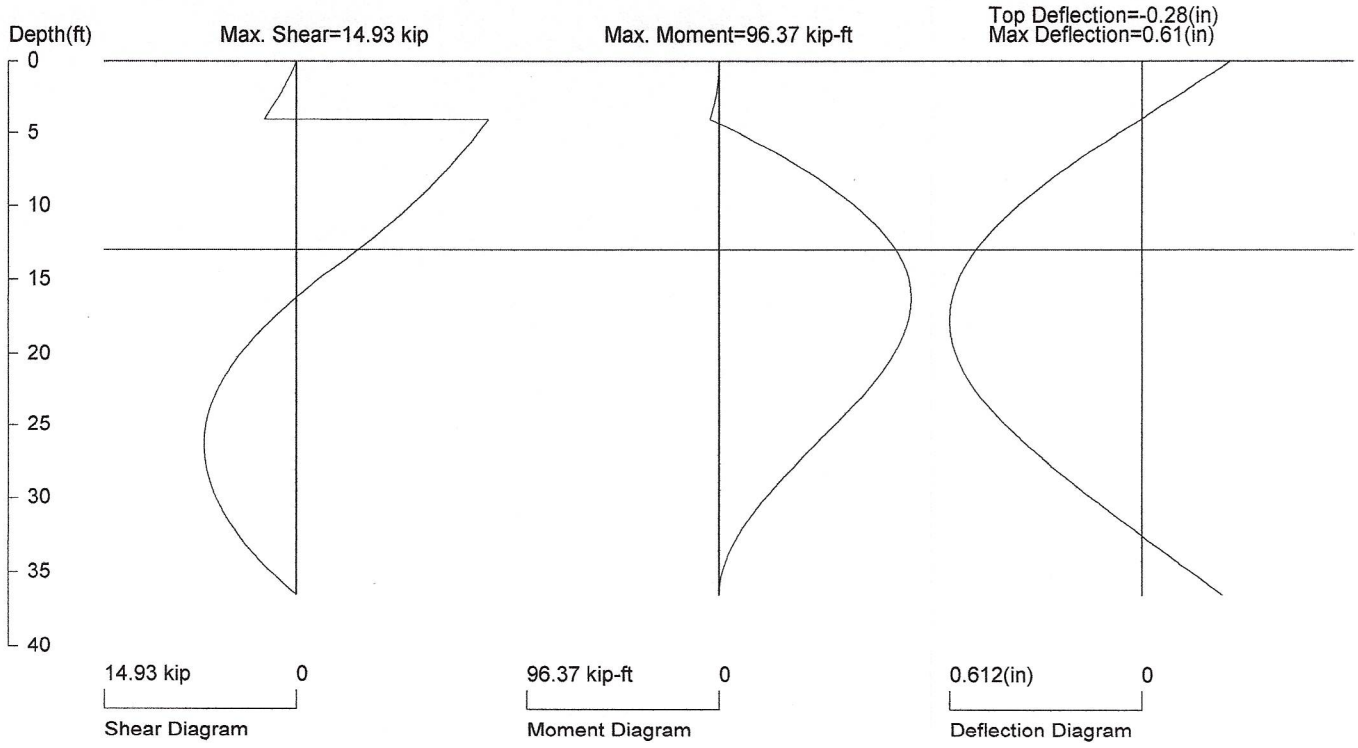

PRESSURE, SHEAR, MOMENT, AND DEFLECTION DIAGRAMS

Based on pile spacing: 1.0 foot or meter

First Suitable Pile: 6M: E (ksi)=29000.0, I (in4)/foot=753.2

File: C:\Users\slor\Desktop\LDWMR\LDWMRBH1XT.sh8

Wall 1 - North Bank, Figure E4-1_Rev 1

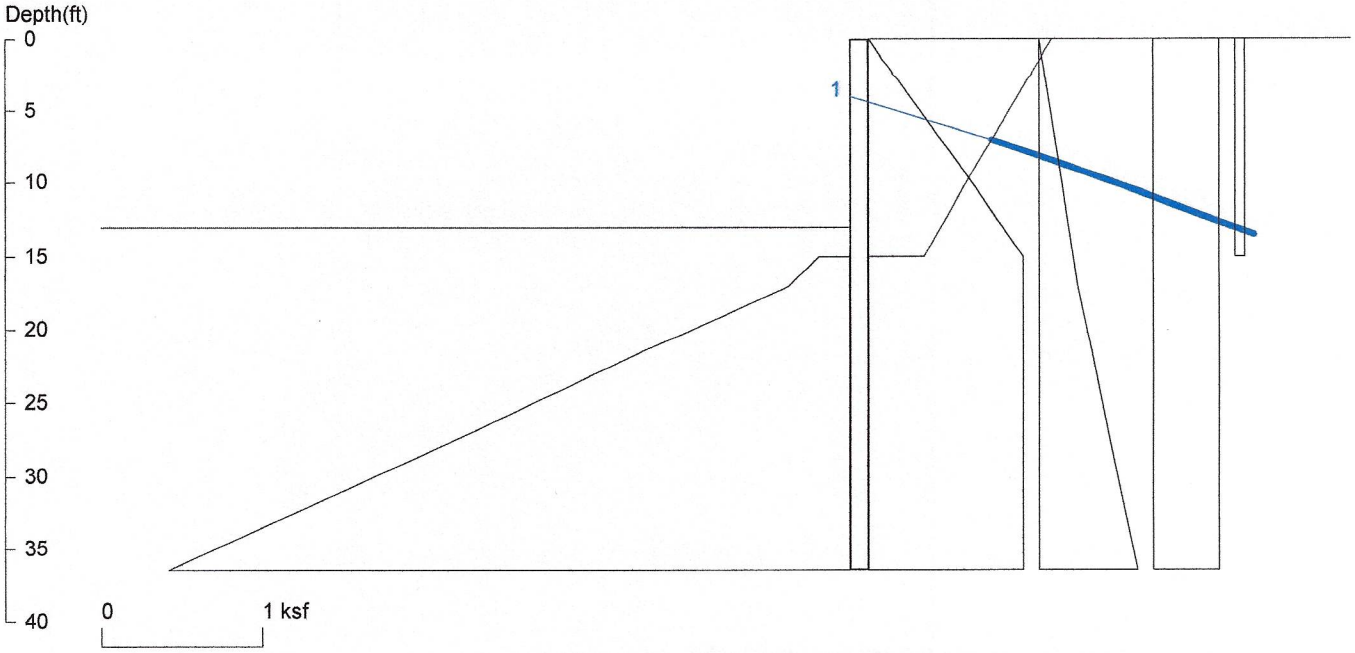

<ShoringSuite> CIVILTECH SOFTWARE USA www.civiltechsoftware.com

Licensed to 4324324234 3424343 Date: 9/6/2025
File: C:\Users\slor\Desktop\LDWMR\LDWMRBH1XT.sh8

Wall Height=13.0 Pile Diameter=1.0 Pile Spacing=1.0 Wall Type: 1. Sheet Pile

PILE LENGTH: Min. Embedment=23.45 Min. Pile Length=36.45
MOMENT IN PILE: Max. Moment=96.37 per Pile Spacing=1.0 at Depth=16.20

PILE SELECTION:
Request Min. Section Modulus = 35.0 in3/ft=1883.94 cm3/m, Fy= 50 ksi = 345 MPa, Fb/Fy=0.66
-> Piles meet Min. Section Requirements: Top Deflection is shown in (in)
6M (-0.28) CZ128 (-0.89) 6H (-0.26) AZ19 (-0.78) AZ20700 (-0.70)
H155 (-0.96) RZ11 (-0.95) PZ32 (-0.96) BZ20.7L (-0.86) CZ141 (-0.81)
CZ148 (-0.77) 4N (-0.72) AZ25 (-0.55) FSPZ25 (-0.75)

BRACE FORCE: Strut, Tieback, Plate Anchor, and Deadman

No. & Type	Depth	Angle	Space	Total F.	Horiz. F.	Vert. F.	L_free	Fixed Length
1. Tieback	4.0	20.0	8.0	148.4	139.5	50.8	8.9	126.0

UNITS: Width,Diameter,Spacing,Length,Depth,and Height - ft; Force - kip; Bond Strength and Pressure - ksf

DRIVING PRESSURES (ACTIVE, WATER, & SURCHARGE):

Z1	P1	Z2	P2	Slope
0	0	15	.96	0.064000
15	.96	100	.96	0.000000
0	0	17	.238	0.014000
17	.238	100	1.815	0.019000
0	.407	100	.407	0.000000
0	.06	15	.06	0.000000

PASSIVE PRESSURES: Pressures below will be divided by a Factor of Safety =1.25

Z1	P1	Z2	P2	Slope
15.0	0.19	17.0	0.38	0.095

17.0	0.38	100.0	16.81	0.198

ACTIVE SPACING:

No.	Z depth	Spacing
1	0.00	1.00
2	13.00	1.00

PASSIVE SPACING:

No.	Z depth	Spacing
1	15.00	1.00
2	99.00	1.00

UNITS: Width,Spacing,Diameter,Length,and Depth - ft; Force - kip; Moment - kip-ft
Friction,Bearing,and Pressure - ksf; Pres. Slope - kip/ft3; Deflection - in

Wall 1 - North Bank, Figure E4-1_Rev 1

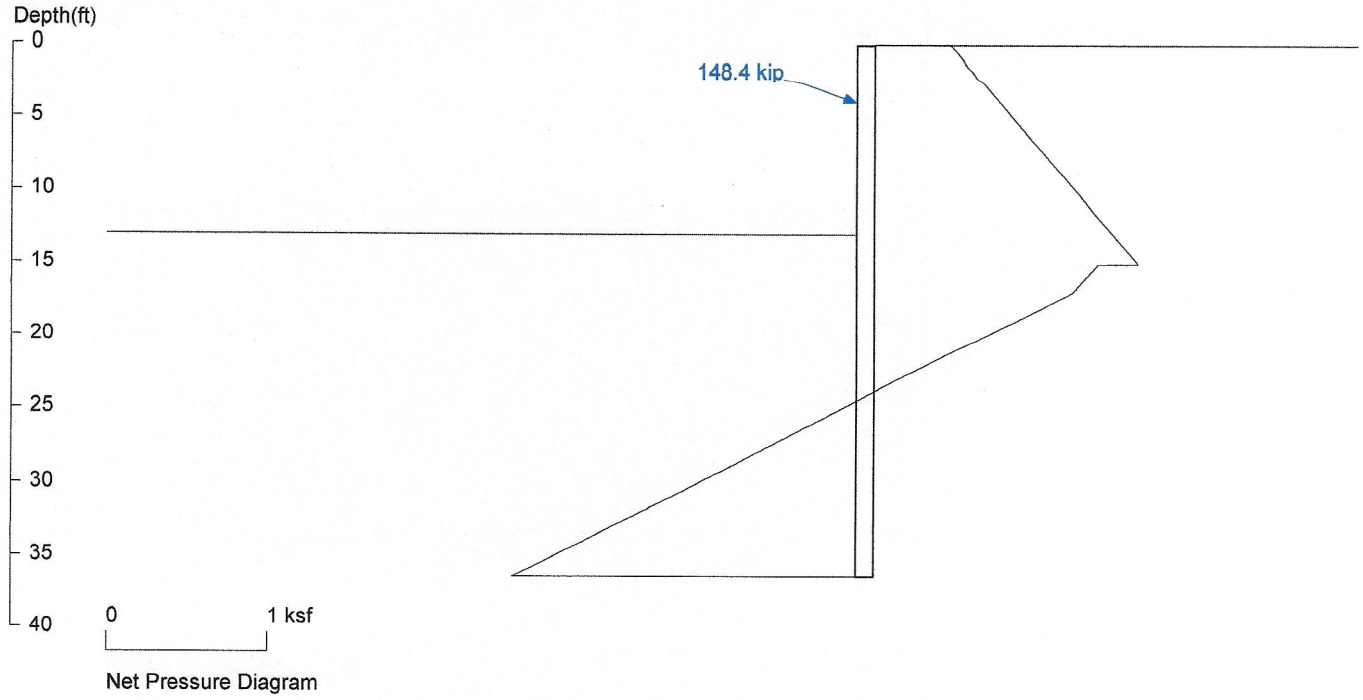

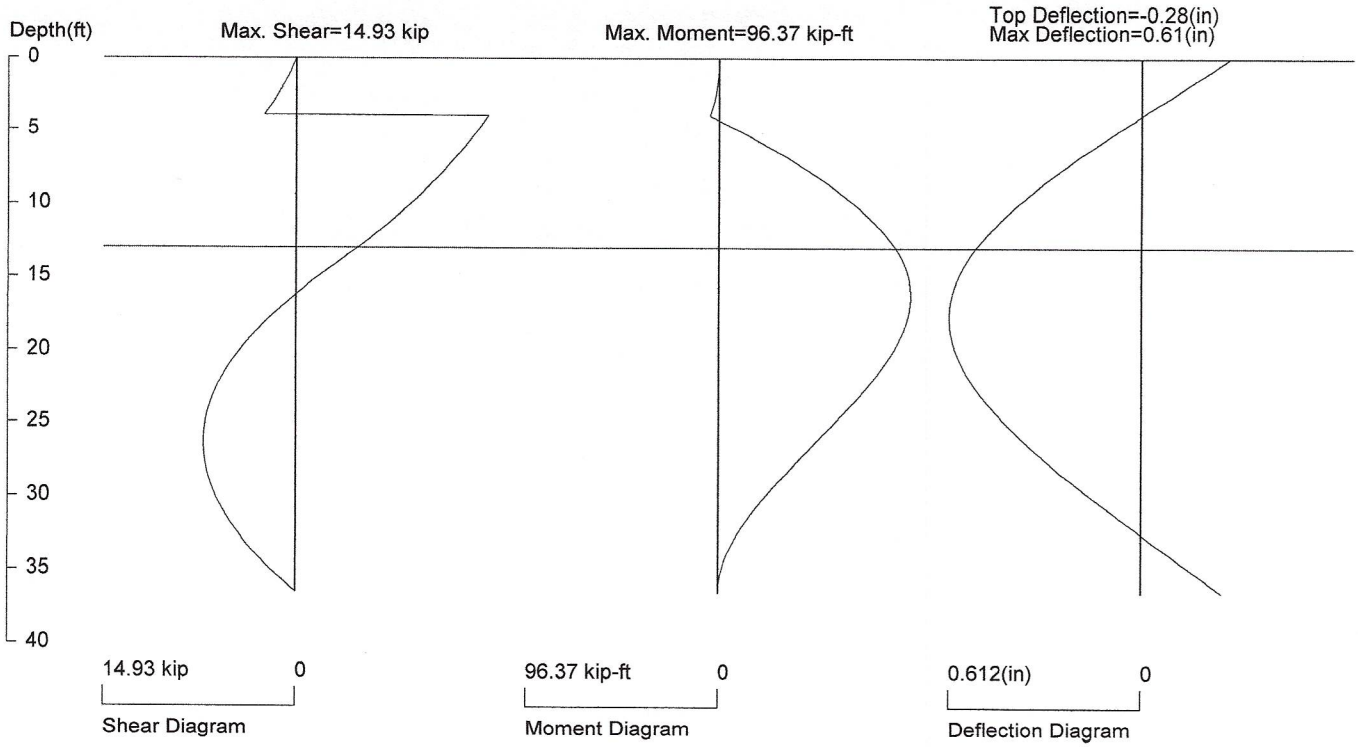

PRESSURE, SHEAR, MOMENT, AND DEFLECTION DIAGRAMS

Based on pile spacing: 1.0 foot or meter

First Suitable Pile: 6M: E (ksi)=29000.0, I (in4)/foot=753.2

File: C:\Users\slor\Desktop\LDWMR\LDWMRBH1XT.sh8

****

SHORING WALL CALCULATION SUMMARY
The leading shoring design and calculation software
Software Copyright by CivilTech Software
www.civiltechsoftware.com

****

ShoringSuite Software is developed by CivilTech Software, Bellevue, WA, USA.
The calculation method is based on the following references:

1. FHWA 98-011, FHWA-RD-97-130, FHWA SA 96-069, FHWA-IF-99-015
2. STEEL SHEET PILING DESIGN MANUAL by Pile Buck Inc., 1987
3. DESIGN MANUAL DM-7 (NAVFAC), Department of the Navy, May 1982
4. TRENCHING AND SHORING MANUAL Revision 12, California Department of Transportation, January 2000
6. EARTH SUPPORT SYSTEM & RETAINING STRUCTURES, Pile Buck Inc. 2002
5. DESIGN OF SHEET PILE WALLS, EM 1110-2-2504, U.S. Army Corps of Engineers, 31 March 1994
7. EARTH RETENTION SYSTEMS HANDBOOK, Alan Macnab, McGraw-Hill. 2002
8. AASHTO HB-17, American Association of State and Highway Transportation Officials, 2 September 2002

UNITS: Width/Spacing/Diameter/Length/Depth - ft, Force - kip, Moment - kip-ft, Friction/Bearing/Pressure - ksf, Pres. Slope - kip/ft3, Deflection - in

---

Licensed to 4324324234 3424343
Date: 9/6/2025 File: C:\Users\slor\Desktop\LDWMR\LDWMRBH1XT.sh8

Title: Wall 1 - North Bank, Figure E4-1_Rev 1
Subtitle:

**********INPUT DATA**********

Wall Type: 1. Sheet Pile
- Wall Height: 13.00
- Pile Diameter: 1.00
- Pile Spacing: 1.00
- Factor of Safety (F.S.): 1.25

Lateral Support Type (Braces): 3. Tieback
- Top Brace Increase (Multi-Bracing): Add 15%*
- Brace Position (One Brace Case): Normal Brace*

No-Load Zone:
- Vertical Depth for No-Load Zone: 15.00
- H-Distance (Input H/V ratio) for No-Load Zone: 0.25
- Angle from H. Line for No-Load Zone: 60.00

Embedment Option: 1. Yes
- Friction at Pile Tip: No

Pile Properties:
- Steel Strength, Fy: 50 ksi = 345 MPa
- Allowable Fb/Fy: 0.66
- Elastic Module, E: 29000.00

Moment of Inertia, I: 2000
User Input Pile: W14X90

* DRIVING PRESSURE (ACTIVE, WATER, & SURCHARGE) *

No.	Z1 top	Top Pres.	Z2 bottom	Bottom Pres.	Slope
1	0	0	15	.96	0.064000
2	15	.96	100	.96	0.000000
3	0	0	17	.238	0.014000
4	17	.238	100	1.815	0.019000
5	0	.407	100	.407	0.000000
6	0	.06	15	.06	0.000000
7					

* PASSIVE PRESSURE *
The pressures below will be divided by a Factor of Safety =1.25

No.	Z1 top	Top Pres.	Z2 bottom	Bottom Pres.	Slope
1	15.00	0.19	17.00	0.38	0.0950
2	17.00	0.38	100.00	16.81	0.1980

* ACTIVE SPACE *

No.	Z depth	Spacing
1	0.00	1.00
2	13.00	1.00

* PASSIVE SPACE *

No.	Z depth	Spacing
1	15.00	1.00
2	99.00	1.00

* BRACE: STRUT, TIEBACK, ANCHOR PLATE, OR DEADMAN *

No.	Z brace	Angle	Spacing	Input1*	Input2*	Type
1	4.00	20.0	8.00	0.50	0.75	Tieback

*For Tieback: Input1 = Diameter; Input2 = Bond Stength
*For Plate: Input1 = Diameter; Input2 = Allowable Pressure
*For Deaman: Input1 = Horz. Width; Input2 = Allowable Pressure; Angle = 0

**********CALCULATION**********

The calculated moment and shear are per pile spacing. Sheet piles are per one foot or meter; Soldier piles are per pile.

Top Pressures start at depth = 0.00

NUMBER OF BRACE LEVEL = 1

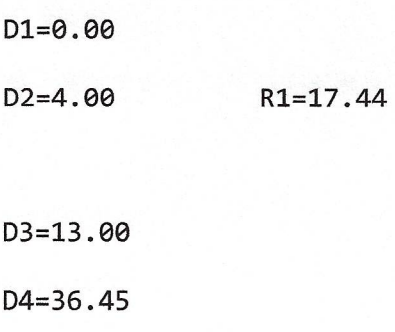

D1 - TOP DEPTH
D2 - BRACE DEPTH R1 - REACTION
D3 - EXCAVATION BASE
D4 - PILE TIP

TOTAL REACTION: R1 = 17.44
TOTAL PRESSURES ACTING ON WALL = 17.44
Total Reactions = Total Pressures, OK!

BRACE NO.1 AT DEPTH = 4.00
R1 = Brace Load = 17.44

**********RESULTS**********

* EMBEDMENT *
MINIMUM EMBEDMENT = 23.45
TOTAL MINIMUM PILE LENGTH = 36.45

* MOMENT IN PILE (per pile spacing)*
Pile Spacing: sheet piles are one foot or one meter; soldier piles are one pile.

No.	Depth	M @ Brace	Mmax in Span	Depth of Mmax
1	4.00	4.49	96.37	16.20

Overall Maximum Moment = 96.37 at 16.20
Maximum Shear = 14.93

Moment and Shear are per pile spacing: 1.0 foot or meter

* BRACE: STRUT, TIEBACK, ANCHOR PLATE, OR DEADMAN *
The calculated brace force are per brace spacing.

No.	DEPTH	Tangle	SPACING	HORIZONTAL	VERTICAL	TOTAL LOAD
1	4.00	20.0	8.00	139.49	50.77	148.45

No.	DEPTH	Free length	Type and Data
1	4.00	8.88	Tieback, Bond length = 126.00

* VERTICAL LOADING *
Vertical Loading from Braces = 6.35
Vertical Loading from External Load = 0.00
Total Vertical Loading = 6.35

**********SHEET PILE SELECTION**********

Overall Maximum Moment = 96.37 at 16.20
  Request Min. Section Modulus = 35.04 in3/ft = 1883.94 cm3/m, Fy= 50 ksi = 345 MPa, Fb/Fy=0.66
   The pile selection is based on the magnitude of the moment only. Axial force is neglected.
   Sx(in3) and Ix(in4) are per one foot of horizontal width of the pile

   * Note: The sheet pile properties are in English Units and based on one foot width (even in Metric unit).

   6M(English): Sx= 35.30 in3/ft Ix= 753.23 in4/ft Weight= 63.90 lb/ft
   6M(Metrics): Sx= 1897.73 cm3/m Ix= 1028.61 x100cm4/m Weight= 0.933 kN/m
      Top deflection = -0.280(in)
   CZ128(English): Sx= 35.34 in3/ft Ix= 236.50 in4/ft Weight= 26.20 lb/ft
   CZ128(Metrics): Sx= 1899.88 cm3/m Ix= 322.96 x100cm4/m Weight= 0.383 kN/m
      Top deflection = -0.892(in)
   6H(English): Sx= 35.50 in3/ft Ix= 816.13 in4/ft Weight= 67.60 lb/ft
   6H(Metrics): Sx= 1908.48 cm3/m Ix= 1114.51 x100cm4/m Weight= 0.987 kN/m
      Top deflection = -0.258(in)
   AZ19(English): Sx= 36.10 in3/ft Ix= 270.80 in4/ft Weight= 26.34 lb/ft
   AZ19(Metrics): Sx= 1940.74 cm3/m Ix= 369.80 x100cm4/m Weight= 0.385 kN/m
      Top deflection = -0.779(in)
   AZ20700(English): Sx= 36.20 in3/ft Ix= 300.00 in4/ft Weight= 24.43 lb/ft

```
AZ20700(Metrics):    Sx= 1946.11 cm3/m  Ix= 409.68 x100cm4/m   Weight= 0.357 kN/m

    Top deflection = -0.703(in)
H155(English):    Sx= 37.20 in3/ft  Ix= 219.70 in4/ft   Weight= 31.70 lb/ft
H155(Metrics):    Sx= 1999.87 cm3/m  Ix= 300.02 x100cm4/m   Weight= 0.463 kN/m
    Top deflection = -0.960(in)
RZ11(English):    Sx= 37.20 in3/ft  Ix= 221.90 in4/ft   Weight= 30.00 lb/ft
RZ11(Metrics):    Sx= 1999.87 cm3/m  Ix= 303.03 x100cm4/m   Weight= 0.438 kN/m
    Top deflection = -0.950(in)
PZ32(English):    Sx= 38.30 in3/ft  Ix= 220.40 in4/ft   Weight= 32.00 lb/ft
PZ32(Metrics):    Sx= 2059.01 cm3/m  Ix= 300.98 x100cm4/m   Weight= 0.467 kN/m
    Top deflection = -0.957(in)
BZ20.7L(English):    Sx= 38.40 in3/ft  Ix= 245.90 in4/ft   Weight= 30.20 lb/ft
BZ20.7L(Metrics):    Sx= 2064.38 cm3/m  Ix= 335.80 x100cm4/m   Weight= 0.441 kN/m

    Top deflection = -0.858(in)
CZ141(English):    Sx= 39.06 in3/ft  Ix= 261.40 in4/ft   Weight= 28.90 lb/ft
CZ141(Metrics):    Sx= 2099.87 cm3/m  Ix= 356.97 x100cm4/m   Weight= 0.422 kN/m
    Top deflection = -0.807(in)
CZ148(English):    Sx= 40.92 in3/ft  Ix= 273.90 in4/ft   Weight= 30.30 lb/ft
CZ148(Metrics):    Sx= 2199.86 cm3/m  Ix= 374.04 x100cm4/m   Weight= 0.442 kN/m
    Top deflection = -0.770(in)
4N(English):    Sx= 44.90 in3/ft  Ix= 291.70 in4/ft   Weight= 35.00 lb/ft
4N(Metrics):    Sx= 2413.82 cm3/m  Ix= 398.35 x100cm4/m   Weight= 0.511 kN/m
    Top deflection = -0.723(in)
AZ25(English):    Sx= 45.70 in3/ft  Ix= 382.60 in4/ft   Weight= 29.74 lb/ft
AZ25(Metrics):    Sx= 2456.83 cm3/m  Ix= 522.48 x100cm4/m   Weight= 0.434 kN/m
    Top deflection = -0.551(in)
FSPZ25(English):    Sx= 46.70 in3/ft  Ix= 280.00 in4/ft   Weight= 37.90 lb/ft
FSPZ25(Metrics):    Sx= 2510.59 cm3/m  Ix= 382.37 x100cm4/m   Weight= 0.553 kN/m
    Top deflection = -0.753(in)
```

Date: 8-2025 By: AB BEI No. _____ Sheet No. _____ of _____ Sheets

Subject: LDWMR – 30% Remedial Design

RM 2.2 Wall 1 – North Bank Anchored Wall

Buttress

Req'd S_f min ≈ ~~30~~ 35 in³/ft

Use PZ 35 or AZ 26 or equal { F_y = 50 ksi; F_B = 33 ksi

Anchor Force ≈ 18 K/ft { ~~130~~ 150 K @ 8' OC; ~~100~~ 112 K @ 6' OC

w/ 0.6" Dia Strands 270 K

A_{ps} = 0.217 in²

Max design Load = $0.6 A_{ps} f_{pu}$
= 0.6 × 0.217 × 270 = 35.2 K/Strand

Max Jacking Load = $0.8 A_{ps} \times f_{pu}$
= 0.8 × 0.217 × 270 = 46.9 K/Strand

Max Anchor Spcg = 4 @ 8' OC
or 3 @ 6' OC

Provide ~~110~~ 130 Ft Fixed anchor length
Nominal Snug-tight force
Lug ~~60~~ 50 to 70 K

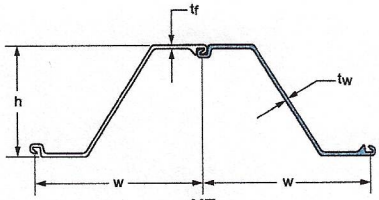

NZ

SECTION	Width (w) in / mm	Height (h) in / mm	THICKNESS Flange (t_f) in / mm	THICKNESS Web (t_w) in / mm	Cross Sectional Area in²/ft / cm²/m	WEIGHT Single Pile lb/ft / kg/m	WEIGHT Wall Area lb/ft² / kg/m²	SECTION MODULUS Elastic in³/ft / cm³/m	SECTION MODULUS Plastic in³/ft / cm³/m	Moment of Inertia in⁴/ft / cm⁴/m	COATING AREA Both Sides ft²/ft of single / m²/m	COATING AREA Wall Surface ft²/ft² / m²/m²
NZ 14	30.31 770	13.39 340	0.375 9.5	0.375 9.5	6.40 135.4	55 81.26	21.77 106.30	25.65 1379	30.50 1640	171.7 23447	6.10 1.86	1.20 1.20
NZ 19	27.56 700	16.14 410	0.375 9.5	0.375 9.5	7.07 149.6	55 81.85	24.05 117.40	35.08 1886	41.33 2222	283.1 38659	6.18 1.88	1.35 1.35
NZ 20	27.56 700	16.16 411	0.394 10.0	0.394 10.0	7.34 155.4	57 85.37	24.82 122.00	36.24 1948	42.80 2301	292.8 39984	6.18 1.88	1.35 1.35
NZ 21	27.56 700	16.20 412	0.433 11.0	0.433 11.0	7.80 165.2	61 90.78	26.56 129.70	38.69 2080	45.85 2465	313.4 42797	6.18 1.88	1.35 1.35
NZ 22	27.56 700.0	16.25 413.0	0.480 12.20	0.480 12.20	8.57 181.4	67 99.71	29.20 142.44	41.47 2230	49.34 2653	336.9 46006	6.18 1.88	1.35 1.35
NZ 26	27.56 700	17.32 440	0.500 12.7	0.500 12.7	9.08 192.2	71 105.66	30.99 151.30	48.50 2608	57.01 3065	419.9 57340	6.49 1.98	1.41 1.41
NZ 28	27.56 700	17.38 441	0.560 14.2	0.560 14.2	9.98 211.2	78 116.08	33.96 165.82	52.62 2829	62.16 3342	457.4 62461	6.49 1.98	1.41 1.41
NZ 38	27.56 700	19.69 500	0.689 17.5	0.500 12.7	11.00 232.9	86 127.99	37.45 182.83	70.84 3809	81.57 4386	697.3 95214	6.58 2.01	1.43 1.43
NZ 40	27.56 700.0	19.73 501.0	0.735 18.70	0.551 14.00	11.77 249.1	92 136.91	40.06 195.59	74.97 4031	86.75 4664	739.6 100997	6.58 2.01	1.43 1.43
NZ 42	27.56 700.0	19.77 502.0	0.769 19.50	0.589 15.0	12.41 262.7	97 144.36	42.24 206.23	78.17 4203	90.80 4881	772.5 105490	6.58 2.01	1.43 1.43

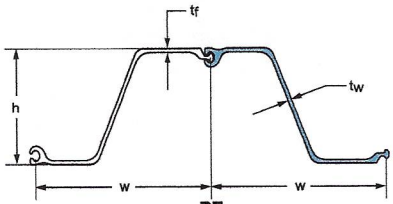

PZ

SECTION	Width (w) in / mm	Height (h) in / mm	THICKNESS Flange (t_f) in / mm	THICKNESS Web (t_w) in / mm	Cross Sectional Area in²/ft / cm²/m	WEIGHT Single Pile lb/ft / kg/m	WEIGHT Wall Area lb/ft² / kg/m²	SECTION MODULUS Elastic in³/ft / cm³/m	SECTION MODULUS Plastic in³/ft / cm³/m	Moment of Inertia in⁴/ft / cm⁴/m	COATING AREA Both Sides ft²/ft of single / m²/m	COATING AREA Wall Surface ft²/ft² / m²/m²
PZ 22	22.00 559	9.0 229	0.375 9.50	0.375 9.50	6.47 136.9	40.3 60.0	22.0 107.4	18.1 973	21.79 1171.4	84.38 11500	4.48 1.37	1.22 1.22
PZ 27	18.00 457	12.0 305	0.375 9.50	0.375 9.50	7.94 168.1	40.5 60.3	27.0 131.8	30.2 1620	36.49 1961.9	184.20 25200	4.48 1.37	1.49 1.49
PZ 35	22.64 575	14.9 378	0.600 15.21	0.500 12.67	10.29 217.8	66.0 98.2	35.0 170.9	48.5 2608	57.17 3073.5	361.22 49300	5.37 1.64	1.42 1.42
PZ 40	19.69 500	16.1 409	0.600 15.21	0.500 12.67	11.77 249.1	65.6 97.6	40.0 195.3	60.7 3263	71.92 3866.7	490.85 67000	5.37 1.64	1.64 1.64

AZ HOT ROLLED STEEL SHEET PILE SERIES

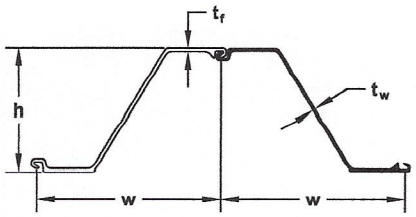

JD FIELDS & COMPANY, INC.
A FIELDS COMPANY

SECTION	Width (w)	Height (h)	THICKNESS Flange (t_f)	THICKNESS Web (t_w)	Cross Sec Area (A)	WEIGHT Single Pile	WEIGHT Wall Area	SECTION MODULUS Elastic	SECTION MODULUS Plastic	Moment of Inertia	COATING AREA Both Sides	COATING AREA Wall Surface
	in	in	in	in	in²/ft	lb/ft	lb/ft²	in³/ft	in³/ft	in⁴/ ft	ft²/ft of single	ft²/ft²
	mm	mm	mm	mm	cm²/m	kg/m	kg/m²	cm³/m	cm³/m	cm⁴/m	m²/m	m²/m²
AZ 12-770	30.31 770	13.52 344	0.335 8.5	0.335 8.5	5.67 120.1	48.78 72.6	19.31 94.3	23.2 1245	27.5 1480	156.9 21430	6.07 1.85	1.20 1.20
AZ 13-770	30.31 770	13.54 344	0.354 9.0	0.354 9.0	5.94 125.8	51.14 76.1	20.24 98.8	24.2 1300	28.8 1546	163.7 22360	6.07 1.85	1.20 1.20
*AZ 14-770	30.31 770	13.56 345	0.375 9.5	0.375 9.5	6.21 131.5	53.42 79.5	21.14 103.2	25.2 1355	30.0 1611	170.6 23300	6.07 1.85	1.20 1.20
AZ 17-700	27.56 700	16.52 420	0.335 8.5	0.335 8.5	6.28 133.0	49.12 73.1	21.38 104.4	32.2 1730	37.7 2027	265.3 36230	6.10 1.86	1.33 1.33
AZ 18-700	27.56 700	16.54 420	0.354 9.0	0.354 9.0	6.58 139.2	51.41 76.5	22.39 109.3	33.5 1800	39.4 2116	276.8 37800	6.10 1.86	1.33 1.33
AZ 19-700	27.56 700	16.56 421	0.375 9.5	0.375 9.5	6.88 145.6	53.76 80.0	23.35 114.3	34.8 1870	41.0 2206	288.4 39380	6.10 1.86	1.33 1.33
AZ 20-700	27.56 700	16.57 421	0.394 10.0	0.394 10.0	7.18 152.0	56.11 83.5	24.43 119.3	36.2 1945	42.7 2296	300.0 40960	6.10 1.86	1.33 1.33
AZ 18-800	31.5 800	17.68 449	0.335 8.5	0.335 8.5	6.07 128.6	54.26 80.7	20.67 100.9	34.2 1840	39.7 2135	302.6 41320	6.82 2.08	1.30 1.30
*AZ 20-800	31.5 800	17.72 450	0.375 9.5	0.375 9.5	6.66 141.0	59.50 88.6	22.67 110.7	37.2 2000	43.3 2330	329.9 45050	6.82 2.08	1.30 1.30
AZ 22-800	31.5 800	17.76 451	0.413 10.5	0.413 10.5	7.25 153.5	64.77 96.4	24.68 120.5	40.3 2165	47.0 2525	357.3 48790	6.82 2.08	1.30 1.30
AZ 23-800	31.50 800	18.66 474	0.453 11.5	0.354 9.0	7.12 150.6	63.56 94.6	24.22 118.2	43.3 2330	49.9 2680	404.6 55260	6.94 2.11	1.32 1.32
*AZ 25-800	31.50 800	18.70 475	0.492 12.5	0.394 10.0	7.71 163.3	68.91 102.6	26.26 128.2	46.5 2500	53.8 2890	435.1 59410	6.94 2.11	1.32 1.32
AZ 27-800	31.50 800	18.74 476	0.531 13.5	0.433 11.0	8.31 176.0	74.26 110.5	28.29 138.1	49.7 2670	57.6 3100	465.5 63570	6.94 2.11	1.32 1.32
AZ 24-700	27.56 700	18.07 459	0.441 11.2	0.441 11.2	8.23 174.1	64.30 95.7	28.00 136.7	45.2 2430	53.5 2867	408.8 55820	6.33 1.93	1.38 1.38
AZ 26-700	27.56 700	18.11 460	0.480 12.2	0.480 12.2	8.84 187.2	69.12 102.9	30.10 146.9	48.4 2600	57.1 3070	437.3 59720	6.33 1.93	1.38 1.38
AZ 28-700	27.56 700	18.15 461	0.520 13.2	0.520 13.2	9.46 200.2	73.93 110.0	32.19 157.2	51.3 2760	60.9 3273	465.9 63620	6.33 1.93	1.38 1.38
AZ 28-750	29.53 750.0	20.04 509.0	0.472 12.00	0.394 10.00	8.09 171.2	67.73 100.80	27.53 134.40	52.3 2810	60.3 3245	523.9 71540	6.93 2.11	1.41 1.41
AZ 30-750	29.53 750.0	20.08 510.0	0.512 13.00	0.433 11.00	8.73 184.7	73.08 108.80	29.70 145.00	55.9 3005	64.8 3485	561.5 76670	6.93 2.11	1.41 1.41
AZ 32-750	29.53 750.0	20.12 511.0	0.551 14.00	0.472 12.00	9.37 198.3	78.44 116.70	31.88 155.60	59.5 3200	69.2 3720	599.0 81800	6.93 2.11	1.41 1.41
AZ 36-700N	27.56 700	19.65 499	0.591 15.0	0.441 11.2	10.20 215.9	79.72 118.6	34.71 169.5	66.8 3590	76.4 4110	656.2 89610	6.73 2.05	1.47 1.47
*AZ 38-700N	27.56 700	19.69 500	0.630 16.0	0.480 12.2	10.87 230.0	84.94 126.4	36.98 180.6	70.6 3795	81.1 4360	694.5 94840	6.73 2.05	1.47 1.47
AZ 40-700N	27.56 700	19.72 501	0.669 17.0	0.520 13.2	11.54 244.2	90.16 134.2	39.26 191.7	74.3 3995	85.7 4605	732.9 100080	6.73 2.05	1.47 1.47
AZ 42-700N	27.56 700	19.65 499	0.709 18.0	0.551 14.0	12.22 258.7	95.51 142.1	41.59 203.1	78.2 4205	90.3 4855	768.4 104930	6.75 2.06	1.47 1.47
AZ 44-700N	27.56 700	19.69 500	0.748 19.0	0.591 15.0	12.89 272.8	100.74 149.9	43.87 214.2	81.9 4405	95.0 5105	806.6 110150	6.75 2.06	1.47 1.47
AZ 46-700N	27.56 700	19.72 501	0.787 20.0	0.630 16.0	13.56 287.0	105.97 157.7	46.14 225.3	85.7 4605	99.5 5350	844.9 115370	6.75 2.06	1.47 1.47
AZ 48-700	27.56 700.0	19.80 503.0	0.866 22.00	0.591 15.00	13.63 288.4	106.49 158.50	46.37 226.40	88.4 4755	102.1 5490	876.2 119650	6.70 2.04	1.46 1.46
AZ 50-700	27.56 700.0	19.84 504.0	0.906 23.00	0.630 16.00	14.30 302.6	111.73 166.30	48.65 237.50	92.2 4955	106.7 5735	914.6 124890	6.70 2.04	1.46 1.46
AZ 52-700	27.56 700.0	19.88 505.0	0.945 24.00	0.669 17.00	14.97 317.0	116.97 174.10	50.93 248.70	95.9 5155	111.3 5985	953.0 130140	6.70 2.04	1.46 1.46

*Indicates standard stocking sections. Please check with your local sales representative for material availability.

STRAND ANCHORS

PERMANENT (DCP) ANCHOR – KEY FEATURES

- Long-lasting system for permanent use
- Variable anchor head and angle compensation designs
- Double Corrosion Protection (DCP) is achieved by protecting the strands with barrier against corrosion. It consists of a corrugated sheathing, a pipe welded to the bearing plate and a cover cap along with encasement in cement grout.

FIELDS OF APPLICATION

- Retaining walls
- Rock and slope stabilization
- Tiedown anchors
- Excavations

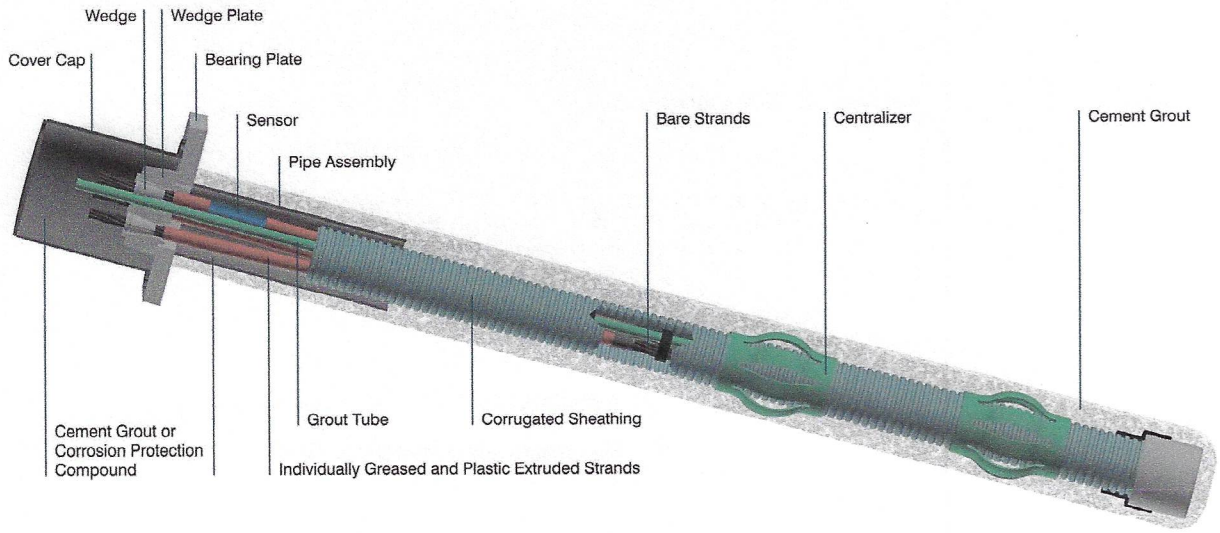

TEMPORARY ANCHOR – KEY FEATURES

- Temporary system for a service life of up to two years
- Variable anchor head and angle compensation designs

FIELDS OF APPLICATION

- Excavations
- Temporary structures

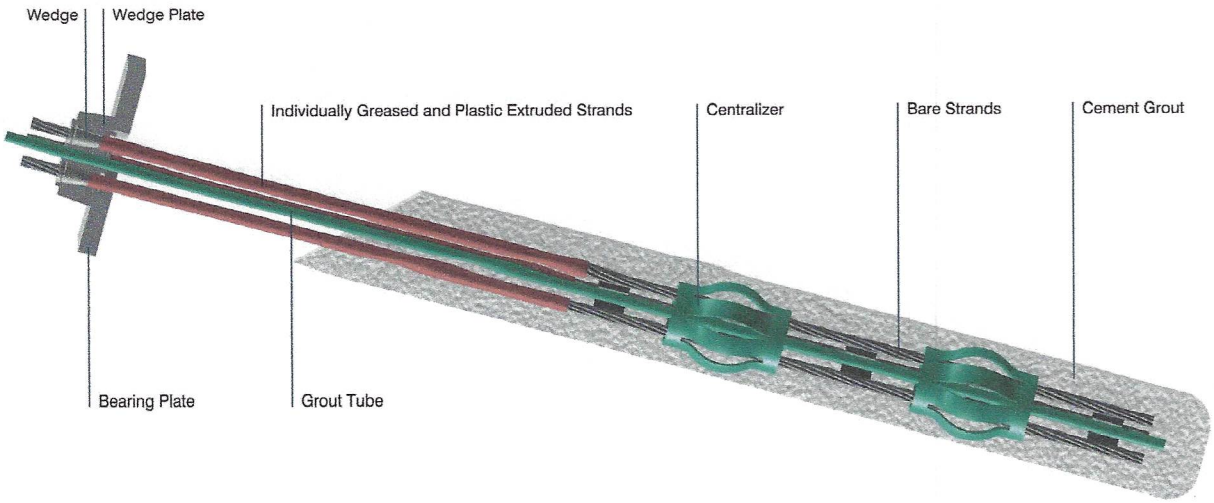

JD Fields & Company, Inc. | 2727 Allen Parkway, Suite 2000 | Houston, Texas 77019 | (281) 558-7199 | www.jdfields.com

STRAND ANCHORS PROPERTIES

Strand Anchors utilize 0.6" dia. 7-wire, low relaxation 270 ksi Strand conforming to ASTM A416 (bare strand) or ASTM A882 (epoxy coated strand).

Number of Strands	Nominal Cross Section Area (A_{ps})		Ultimate Strength ($F_{pu} \times A_{ps}$)		Prestressing Force						Nominal Weight (Bare Steel only)	
					0.80 $F_{pu} \times A_p s$		0.70 $F_{pu} \times A_{ps}$		0.60 $F_{pu} \times A_{ps}$			
ea	in^2	mm^2	kips	kN	kips	kN	kips	kN	kips	kN	lbs/ft	kg/m
1	0.217	140	58.6	261	46.9	208	41	182	35.2	156	0.74	1.09
2	0.434	280	117.2	521	93.7	417	82	365	70.3	313	1.48	1.64
3	0.651	420	175.8	782	140.6	625	123	547	105.5	469	2.22	3.27
4	0.868	560	234.4	1,043	187.5	834	164.1	730	140.6	626	2.96	4.46
5	1.085	700	293.0	1,303	234.4	1,043	205.1	912	175.8	782	3.70	5.51
6	1.302	840	351.6	1,564	281.3	1,251	246.1	1,095	210.9	938	4.44	6.55
7	1.519	980	410.2	1,825	328.2	1,460	287.2	1,277	246.2	1,095	5.18	7.74
8	1.736	1,120	468.8	2,085	375.0	1,668	328.1	1,460	281.3	1,251	5.92	8.78
9	1.953	1,260	527.4	2,346	421.9	1,877	369.2	1,642	316.4	1,408	6.66	9.97
12	2.604	1,680	703.2	3,128	562.6	2,503	492.3	2,190	422.0	1,877	8.88	13.24
15	3.255	2,100	879.0	3,910	703.2	3,128	615.3	2,737	527.4	2,346	11.10	16.52
19	4.123	2,660	1,113.4	4,953	890.7	3,962	779.4	3,467	668.0	2,972	14.06	20.98
27	5.859	3,780	1,582.2	7,038	1,265.8	5,631	1,107.6	4,927	949.4	4,223	19.98	29.76
37	8.029	5,180	2,168.2	9,645	1,734.6	7,716	1,517.8	6,751	1,301.0	5,787	27.38	40.78
48	10.416	6,720	2,812.8	12,512	2,250.2	10,009	1,968.9	8,758	1,687.7	7,507	35.52	52.83
54	11.718	7,560	3,164.4	14,076	2,531.5	11,261	2,215.1	9,853	1,898.6	8,446	39.96	59.38
61	13.237	8,540	3,574.6	15,901	2,859.7	12,721	2,502.2	11,131	2,144.8	9,540	45.14	67.12

A_{ps} = Area Prestressing Steel.
F_{pu} = Minimum Ultimate Strength.
Please consult your local sales office for systems exceeding 61 strands.

DCP STRAND ANCHOR AND WEDGE PLATE DIMENSIONS

Strand Range Inside Sheathing [1]	HDPE Corrugated			Trumpet Pipe		Wedge Plate Dimensions			
ea	Nom. Size in	O.D. in	O.D. mm	O.D. in	O.D. mm	ØG in	ØG mm	H in	H mm
1-3	2	2.44	62	4.5	114	4.69	119	1.8	46
4	2.5	2.92	74	4.5	114	4.69	119	1.8	46
5-6	2.5	2.92	74	4.5	114	5.61	142	2.2	56
7	3	3.60	91	4.5	114	5.61	142	2.2	56
8-9	3	3.60	91	5.63	143	5.75	146	1.69	43
10-12	4	4.60	117	5.63	143	6.75	171	1.95	50
13-15	4	4.60	117	6.63	168	7.09	180	1.97	50
16-17	4	4.60	117	8.63	219	7.87	200	2.17	55
18-19	5	5.85	149	8.63	219	7.87	200	2.17	55
20-24	5	5.85	149	8.63	219	9.45	240	2.95	75
25-27	6	6.8	173	8.63	219	9.45	240	2.95	75

[1] Based on the use of a single 0.5" ID x 0.75" OD internal grout tube. Bearing plate sizes subject to project specific requirements.
Strand anchors larger than 27 strand systems also available.

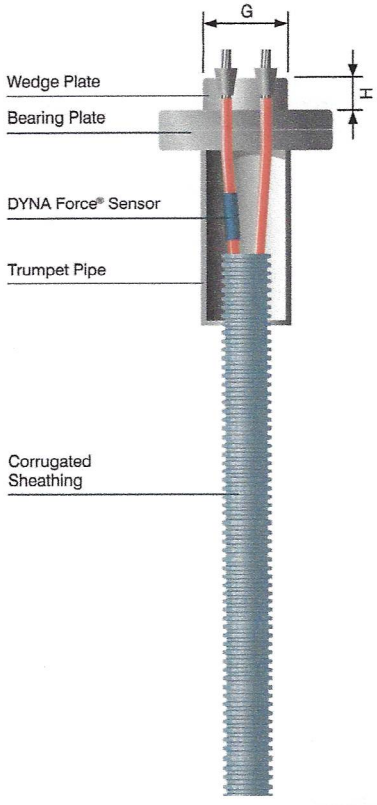

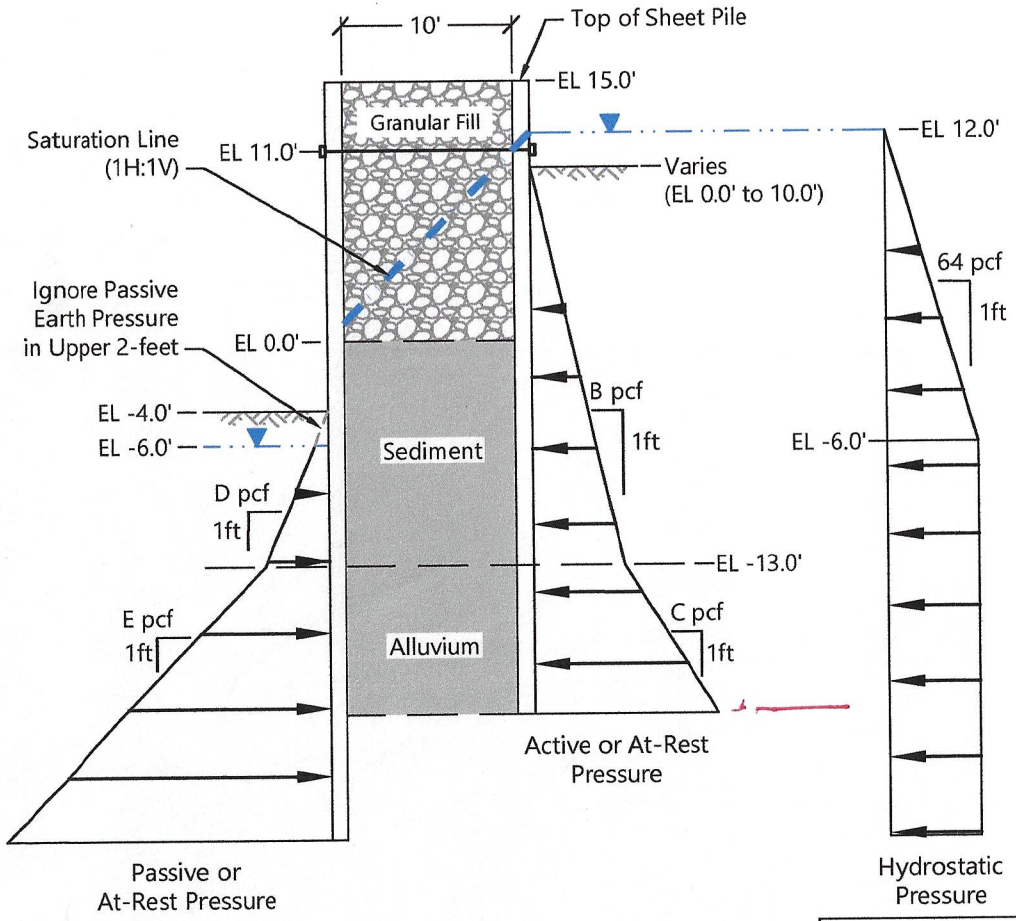

NOTES:

1. All materials between cell walls use an active earth pressure coefficient of K_A = 0.4 per USACE UFC DM 7.2, Foundation and Earth Structures.
2. Movement at the top of wall required to reach minimum active or maximum passive pressure, by tilting or lateral translation, is 0.3% of the wall height for active pressures and 3.0% of the wall height for passive pressures.
3. Non-yielding walls use at rest earth pressure coefficients.
4. Passive pressures are Ultimate values and do not include a factor of safety. We recommend applying a factor of safety of at least 1.25 when computing static passive pressures under temporary conditions.
5. Ignore the contribution of the upper 2 feet of soil at the base of the wall when computing passive pressures.
6. Passive Pressure acts over 3 pile diameters.

Exterior Cofferdam System Parameters			
Variable	**Unit**	**Yielding Walls**	**Non-Yielding Walls**
B	pcf	14	20
C	pcf	19	29
D	pcf	95	
E	pcf	198	

Interior Cofferdam System Parameters (Between Sheet Pile Walls)			
Soil Layer	**Unit Weight (pcf)**	**Active Earth Pressure Coefficient, Ka**	**Active Equivalent Fluid Pressure (pcf)**
Granular Fill - Moist	120	0.40	48
Granular Fill - Buoyant	56	0.40	22
Sediment - Buoyant	36	0.40	14
Sediment - Buoyant	61	0.40	24

Publish Date: 2025/09/18 4:32 PM | User: jgregg
Filepath: D:\Users\jgregg\Desktop\0067-RP-032 Lateral Earth Pressures.dwg | Figure S-3

ANCHOR QEA

Figure S-3
Construction Sequence - RM 2.2 Temporary Cofferdam

Notes
1. This assumes Dredging in Inlet only (west of Cofferdam)
2. Consider Dredging at East of Cofferdam
3. Consider Possibility of Simultaneous Dredging at West and East side. OR restrict sequence

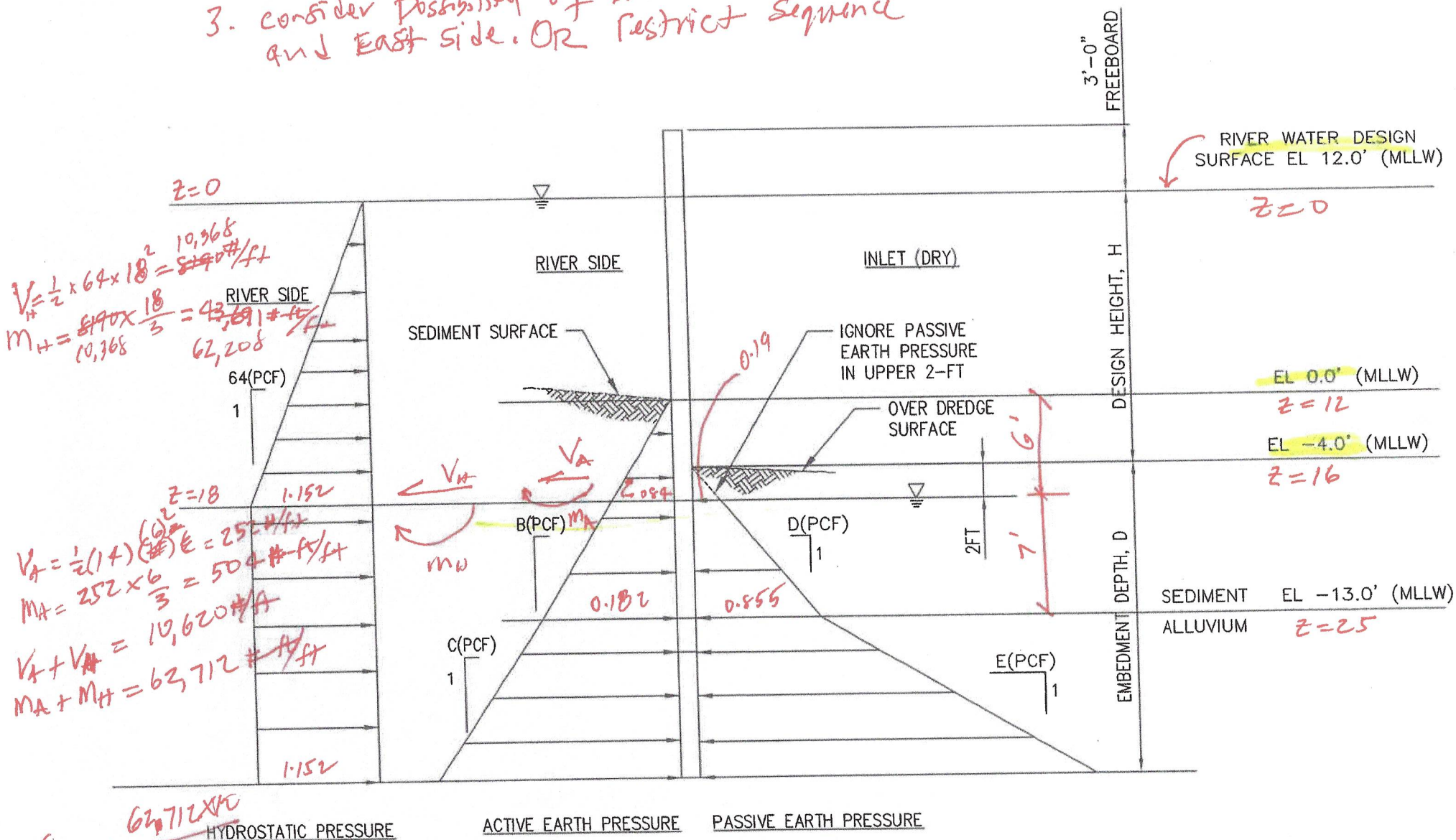

$V_H = \frac{1}{2} \times 64 \times 18^2 = \cancel{8190}\ 10{,}368\ \#/ft$

$M_H = \cancel{8190} \times \frac{18}{3} = \cancel{43{,}691}\ 62{,}208\ \#\text{-}ft/ft$

$V_A = \frac{1}{2}(14)(6)^2 = 252\ \#/ft$

$M_A = 252 \times \frac{6}{3} = 504\ \#\text{-}ft/ft$

$V_A + V_H = 10{,}620\ \#/ft$

$M_A + M_H = 62{,}712\ \#\text{-}ft/ft$

$S_{min} = \frac{62{,}712 \times 12}{0.66 \times 50} = 22.80\ in^3/ft$

WALL 2 – COFFERDAM WITH SEDIMENT SURFACE AT EL 0.0 (REF: FIGURE E4-2)

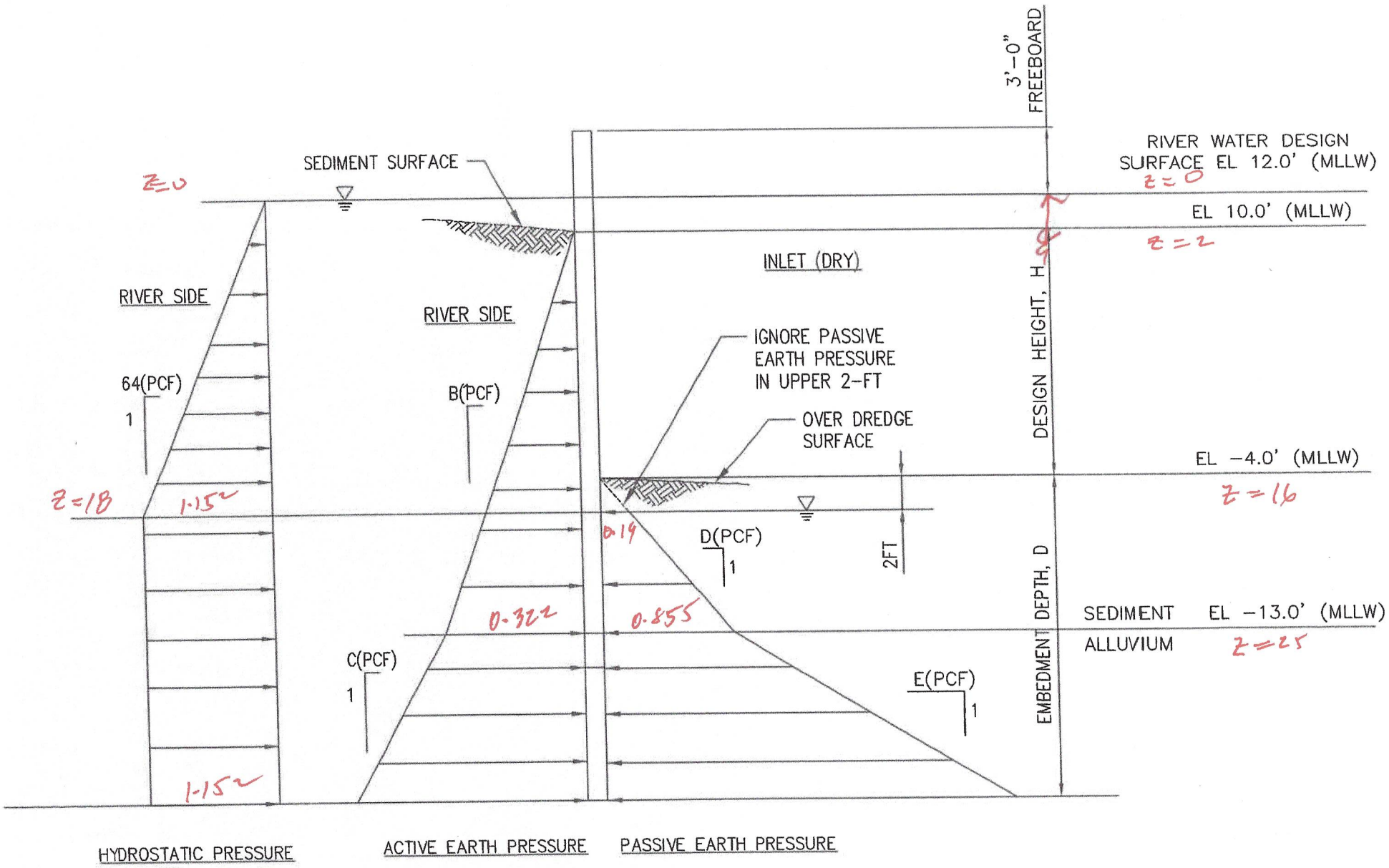

WALL 2 – COFFERDAM WITH SEDIMENT SURFACE AT EL 10.0 (REF: FIGURE E4-2)

Date: 9-2015 By: AB BEI No. _____ Sheet No. ____ of ____ Sheets

Subject: LDWMR – 30% Remedial Design

Double wall cofferdam

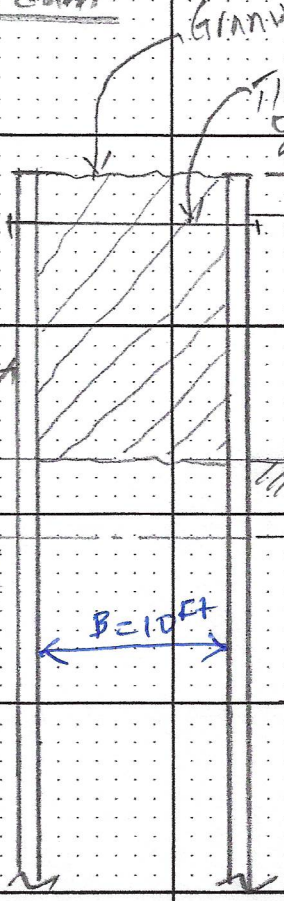

H = 16 Ft (max retained ht)

B = 10 Ft

B/H = 10/16 = 0.63 ← Controls

M_{max} (single pile) = 677.23 K-ft/ft FS = 1.50

Use → = 557.46 " FS = 1.25

2, Top = 0.0 (EL 12 MSL)
Bot = -4.0
E Fix from Top
EL Δ I
10' 60.60 33 1.84 33,000

Assume loose sand & gravel backfill
E = 1450 to 3630 Psi; δ = 30 to 35° SP
ν = 0.20 to 0.40

0' 56.17 32 1.93 22,900
10' 62.92 36 4.98 3,075
0' 64.64 33 3.62 3,000

Use E = 3630 Psi, ν = 0.30

$G_{soil} = \frac{3630}{2(1+0.3)} = 1390$ Psi; L, Apparent length of Fixity = 35 Ft = 420"

$M_{dyl\ wall} = \frac{M_{max}}{2} \times \frac{1}{\lambda L}[\tanh(\lambda L)]$

Date: 9-2025 By: AB BEI No._____ Sheet No._____ of _____ Sheets

Subject: LDWMR - 30% Remedial Design

$\lambda = \sqrt{\frac{B G_{soil}}{2EI}}$; $B = 10^{ft} = 120\ in$

$E = 29 \times 10^6\ psi$

$I = 419.9\ in^4/ft$ (NZ 26)

$361.22\ in^4/ft$ (PZ 35) ← use

$\lambda = \sqrt{\frac{120 \times 1390}{2 \times 29 \times 10^6 \times 361.22}}$

$= 0.0028$ small

$W = 14.9\ in$

$A = 10.29\ in^2$

$I = 361.22\ in^4$

$S = 48.5\ in^3$

$M_{dbl\ wall} = \frac{551.46}{2} \times \frac{.1}{0.0028 \times 420} \times 0.829 = 195.38\ K\text{-}ft/ft$

$S_{50} = \frac{195.38 \times 12}{.66 \times 50} = 72\ in^3/ft$

w/ sufficient tie rod tension $S_{60} = 60\ in^3/ft$

$I_{dlb\ wall} = 2(361.22) + 2(10.29)d^2$ 14.9/2

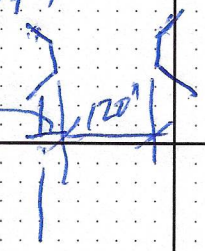

$2d = 120'' + 14.9'' = 134.9''$

$= 2(361.22) + 2(10.29)\left(\frac{134.9}{2}\right)^2 =$

$= 67.45$

$= 94,350\ in^4$

$S_{comb} = 94,350 / 67.45 = 1390\ in^3/ft$

$f_b = \frac{551.46 \times 12}{1390} = 4.76\ ksi < 33\ ksi$

Date: 9-2025 By: AB BEI No._____ Sheet No.____ of ____ Sheets

Subject: LDWMR – 30% Remedial Design

Equilibrium

Sliding – satisfied w/ Computer Analysis, Embed = 60.60m min

Overturning " " "

Effect of backfill neglected

To be confirmed with Finite Element Analysis at 60%

& optimized

Slippage between front and back sheets, Fill shear will also be evaluated w/ FEM Analysis at 60%

Cofferdam EL 0.0 Sediment Surface, EL -4.0 Dredge

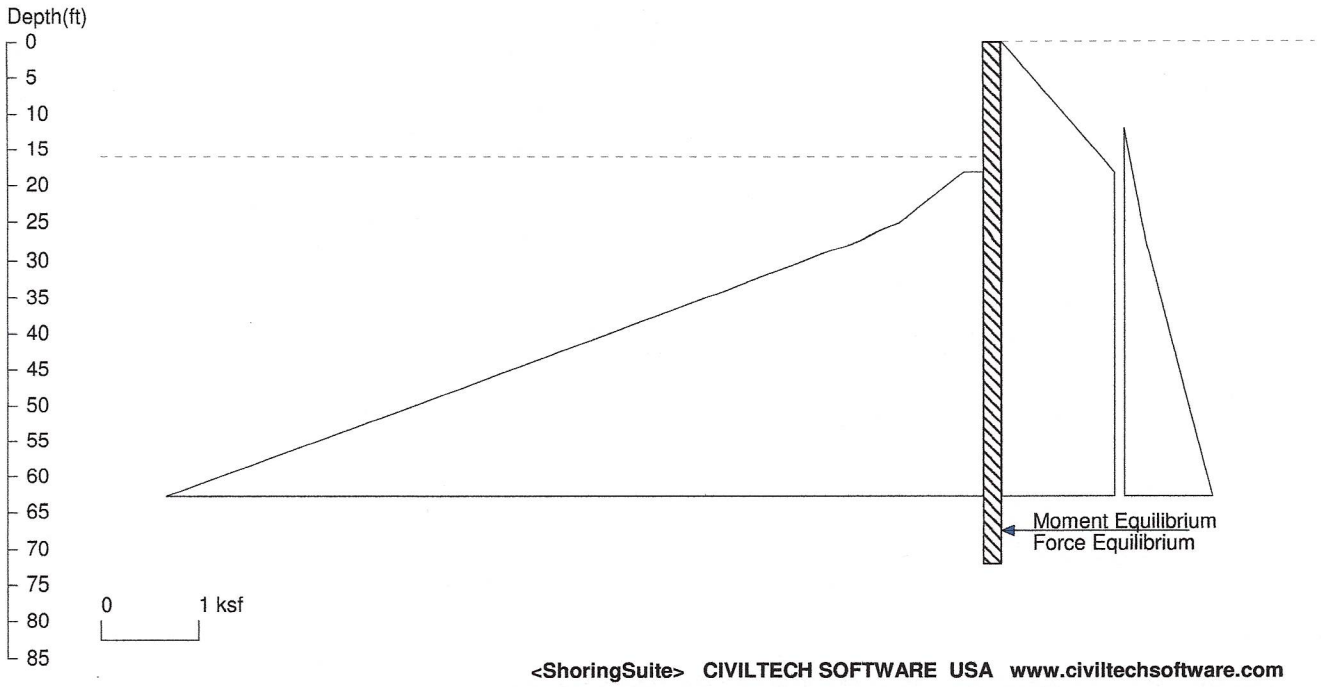

<ShoringSuite> CIVILTECH SOFTWARE USA www.civiltechsoftware.com

Licensed to 4324324234 3424343 Date: 9/21/2025

File: C:\Users\abright\OneDrive - Bright Engineering, Inc\Desktop\LDWMR Calculations\LDWMRCD0125.sh8

Wall Height=16.0 Pile Diameter=1.0 Pile Spacing=1.0 Wall Type: 1. Sheet Pile

PILE LENGTH: Min. Embedment=56.17 Min. Pile Length=72.17
MOMENT IN PILE: Max. Moment=438.73 per Pile Spacing=1.0 at Depth=45.82

PILE SELECTION:
Request Min. Section Modulus = 159.5 in3/ft=8576.79 cm3/m, Fy= 50 ksi = 345 MPa, Fb/Fy=0.66
User Input I (Moment of Inertia):
Top Deflection = 2.56(in) based on E (ksi)=29000.00 and I (in4)/foot=2000.0

DRIVING PRESSURES (ACTIVE, WATER, & SURCHARGE):

Z1	P1	Z2	P2	Slope
0	0	18	1.152	.064
18	1.152	100	1.152	0.000000
12	0	25	0.182	.014
25	.182	100	1.607	.01900

PASSIVE PRESSURES: Pressures below will be divided by a Factor of Safety =1.25

Z1	P1	Z2	P2	Slope
18.0	0.19	25.0	0.86	0.095
25.0	0.86	100.0	15.70	0.198

ACTIVE SPACING:

No.	Z depth	Spacing
1	0.00	1.00
2	16.00	1.00

PASSIVE SPACING:

No.	Z depth	Spacing
1	18.00	1.00
2	99.00	1.00

UNITS: Width,Spacing,Diameter,Length,and Depth - ft; Force - kip; Moment - kip-ft
Friction,Bearing,and Pressure - ksf; Pres. Slope - kip/ft3; Deflection - in

Cofferdam EL 0.0 Sediment Surface, EL -4.0 Dredge

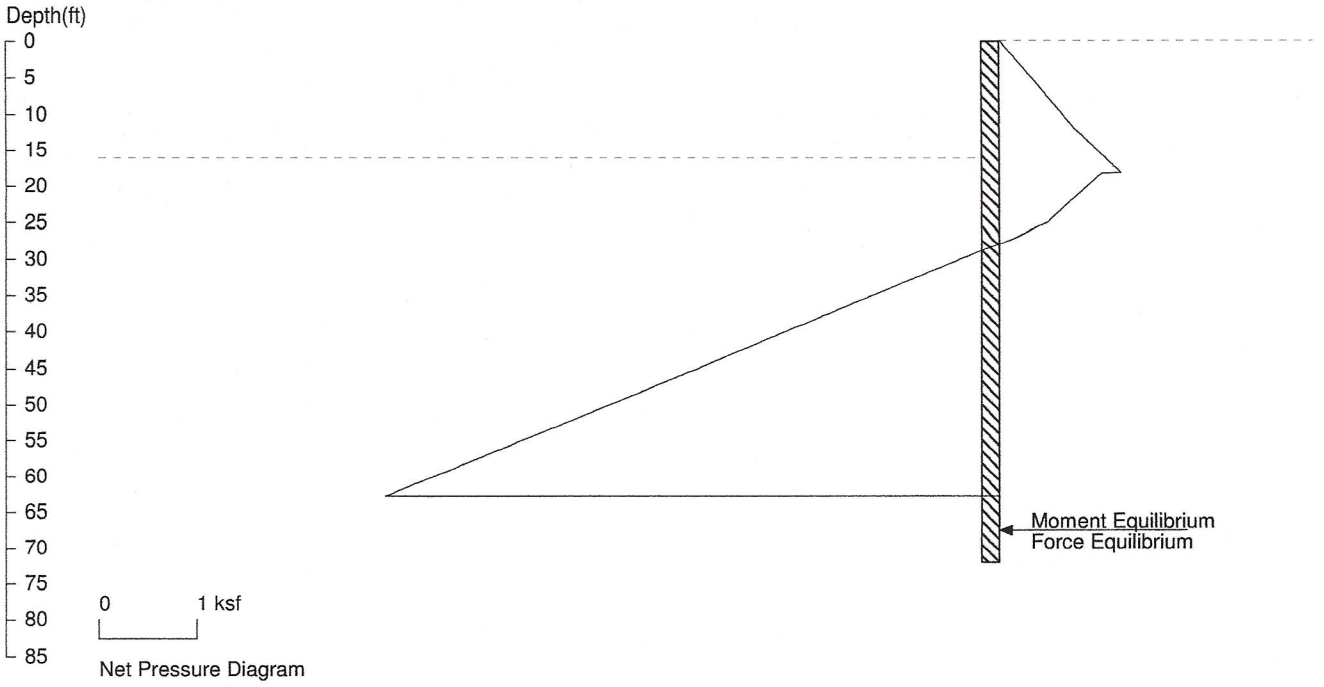

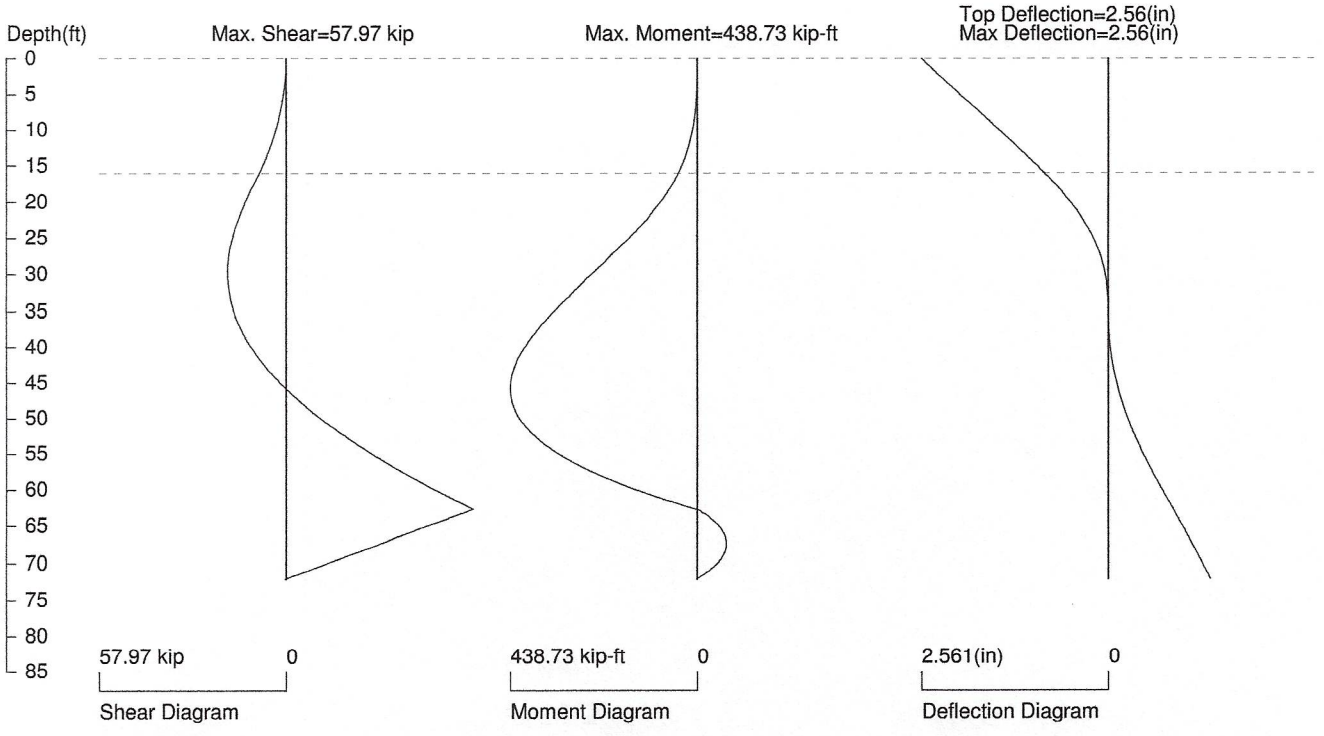

PRESSURE, SHEAR, MOMENT, AND DEFLECTION DIAGRAMS

Based on pile spacing: 1.0 foot or meter

User Input I: E (ksi)=29000.0, I (in4)/foot=2000.0

File: C:\Users\abright\OneDrive - Bright Engineering, Inc\Desktop\LDWMR Calculations\LDWMRCD0125.sh8

Cofferdam EL 10.0 Sediment Surface, EL -4.0 Dredge

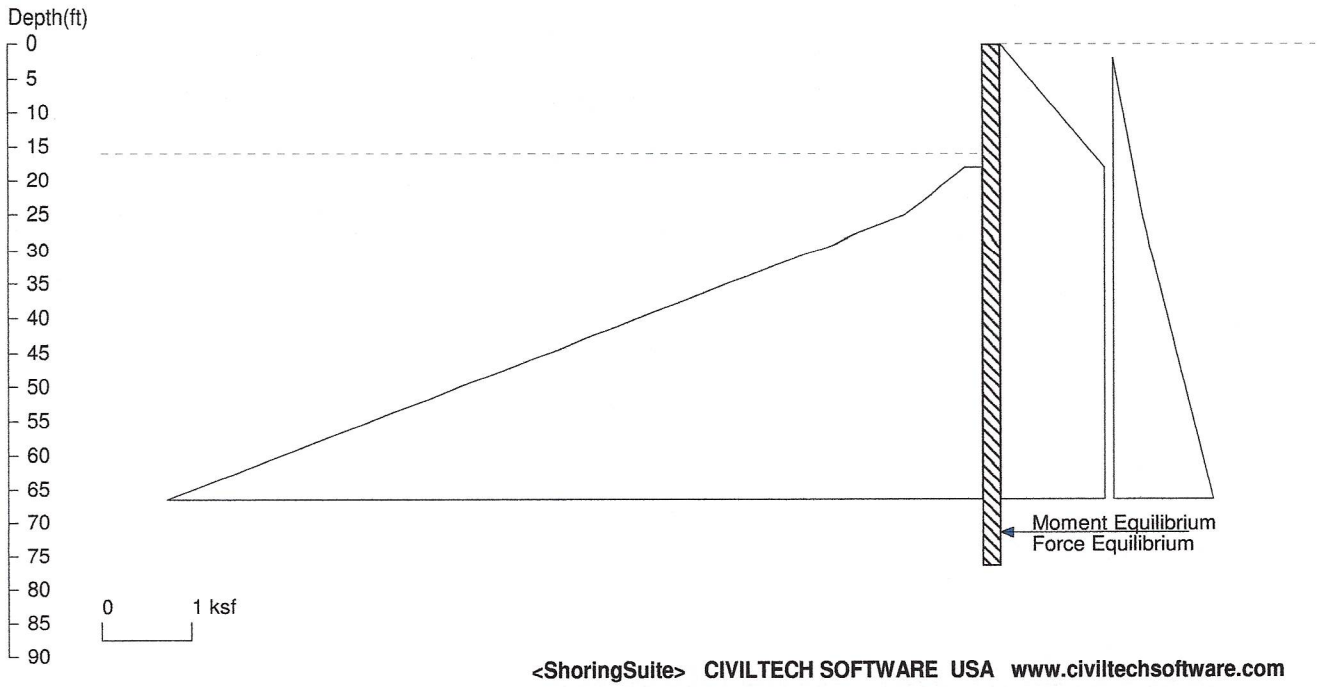

<ShoringSuite> CIVILTECH SOFTWARE USA www.civiltechsoftware.com

Licensed to 4324324234 3424343 Date: 9/21/2025

File: C:\Users\abright\OneDrive - Bright Engineering, Inc\Desktop\LDWMR Calculations\LDWMRCD10.sh8

Wall Height=16.0 Pile Diameter=1.0 Pile Spacing=1.0 Wall Type: 1. Sheet Pile

PILE LENGTH: Min. Embedment=60.60 Min. Pile Length=76.60
MOMENT IN PILE: Max. Moment=551.46 per Pile Spacing=1.0 at Depth=48.20

PILE SELECTION:
Request Min. Section Modulus = 200.5 in3/ft=10780.62 cm3/m, Fy= 50 ksi = 345 MPa, Fb/Fy=0.66
User Input I (Moment of Inertia):
Top Deflection = 3.50(in) based on E (ksi)=29000.00 and I (in4)/foot=2000.0

DRIVING PRESSURES (ACTIVE, WATER, & SURCHARGE):

Z1	P1	Z2	P2	Slope
0	0	18	1.152	.064
18	1.152	100	1.152	0.000000
2	0	25	0.322	.014
25	.322	100	1.747	.01900

PASSIVE PRESSURES: Pressures below will be divided by a Factor of Safety =1.25

Z1	P1	Z2	P2	Slope
18.0	0.19	25.0	0.86	0.095
25.0	0.86	100.0	15.70	0.198

ACTIVE SPACING:

No.	Z depth	Spacing
1	0.00	1.00
2	16.00	1.00

PASSIVE SPACING:

No.	Z depth	Spacing
1	18.00	1.00
2	99.00	1.00

UNITS: Width,Spacing,Diameter,Length,and Depth - ft; Force - kip; Moment - kip-ft
Friction,Bearing,and Pressure - ksf; Pres. Slope - kip/ft3; Deflection - in

Cofferdam EL 10.0 Sediment Surface, EL -4.0 Dredge

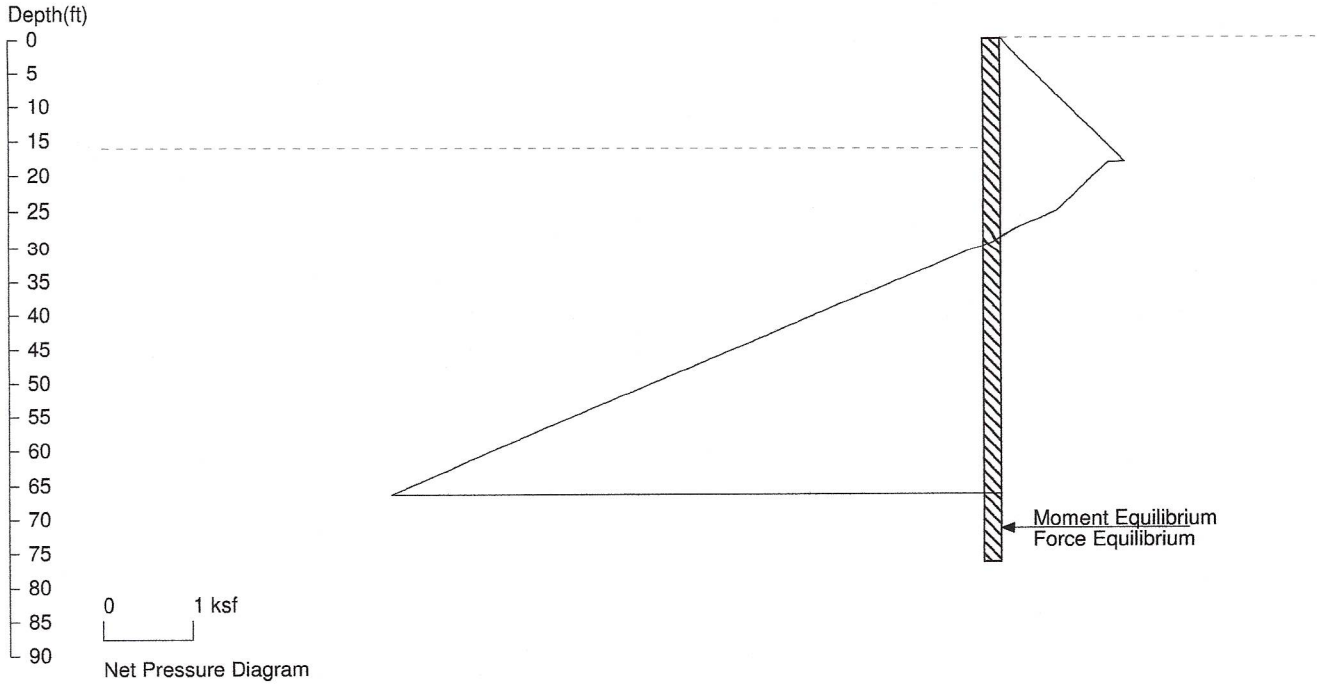

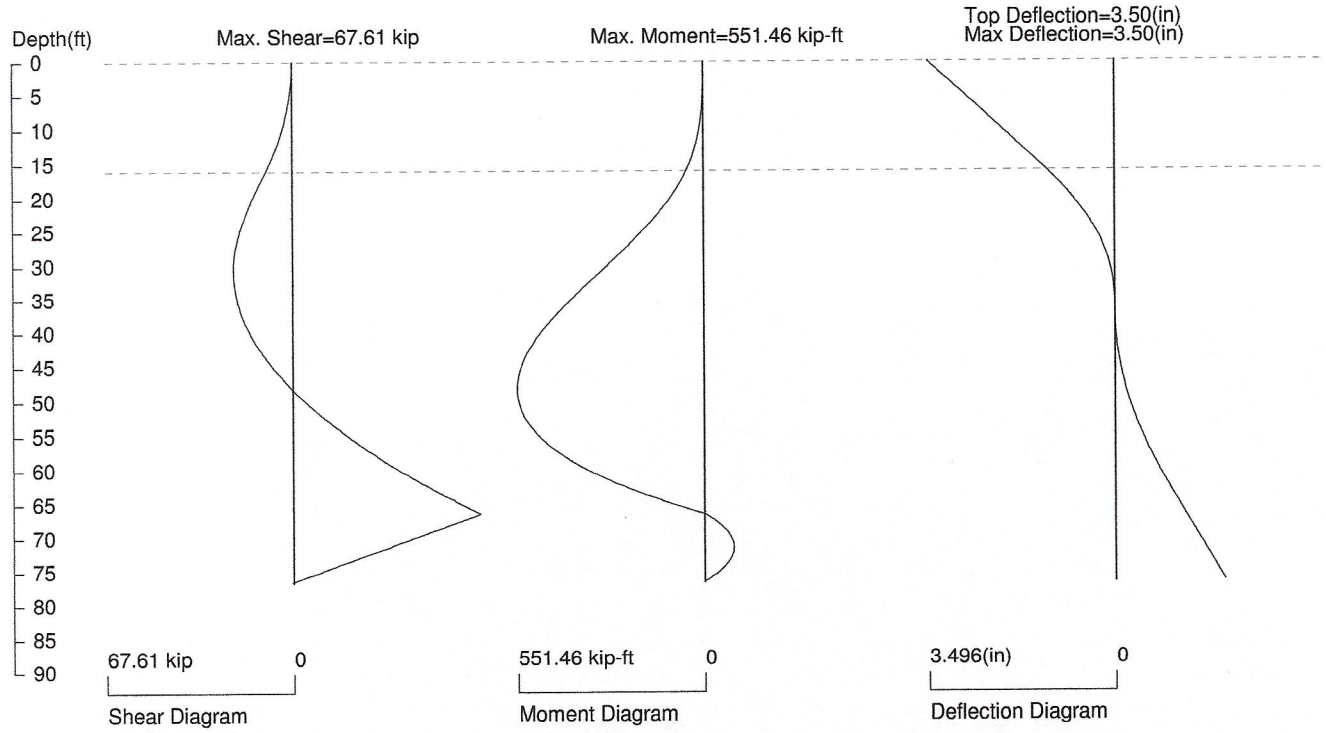

PRESSURE, SHEAR, MOMENT, AND DEFLECTION DIAGRAMS

Based on pile spacing: 1.0 foot or meter

User Input I: E (ksi)=29000.0, I (in4)/foot=2000.0

File: C:\Users\abright\OneDrive - Bright Engineering, Inc\Desktop\LDWMR Calculations\LDWMRCD10.sh8

Cofferdam EL 10.0 Sediment Surface, EL -4.0 Dredge

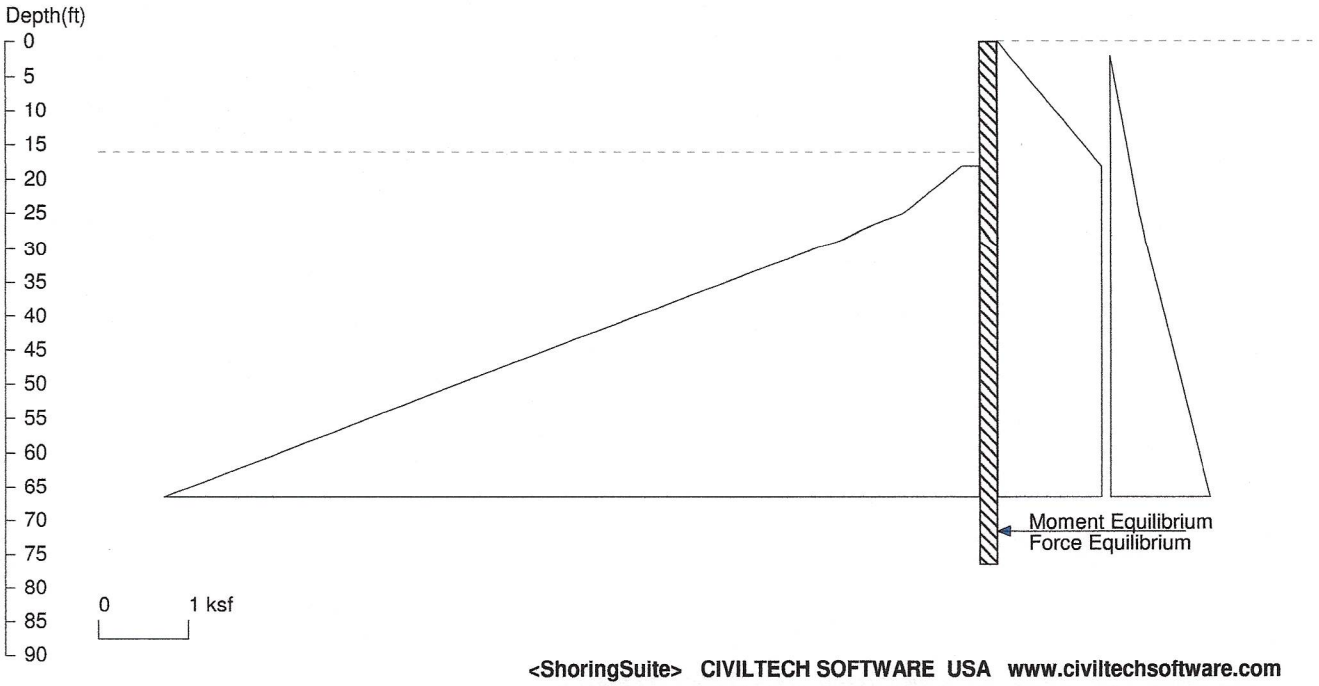

<ShoringSuite> CIVILTECH SOFTWARE USA www.civiltechsoftware.com

Licensed to 4324324234 3424343 Date: 9/21/2025

File: C:\Users\abright\OneDrive - Bright Engineering, Inc\Desktop\LDWMR Calculations\LDWMRCD10.sh8

Wall Height=16.0 Pile Diameter=1.0 Pile Spacing=1.0 Wall Type: 1. Sheet Pile

PILE LENGTH: Min. Embedment=60.60 Min. Pile Length=76.60
MOMENT IN PILE: Max. Moment=551.46 per Pile Spacing=1.0 at Depth=48.20

PILE SELECTION:
Request Min. Section Modulus = 200.5 in3/ft=10780.62 cm3/m, Fy= 50 ksi = 345 MPa, Fb/Fy=0.66
User Input I (Moment of Inertia):
Top Deflection = 3.50(in) based on E (ksi)=29000.00 and I (in4)/foot=2000.0

DRIVING PRESSURES (ACTIVE, WATER, & SURCHARGE):

Z1	P1	Z2	P2	Slope
0	0	18	1.152	.064
18	1.152	100	1.152	0.000000
2	0	25	0.322	.014
25	.322	100	1.747	.01900

PASSIVE PRESSURES: Pressures below will be divided by a Factor of Safety =1.25

Z1	P1	Z2	P2	Slope
18.0	0.19	25.0	0.86	0.095
25.0	0.86	100.0	15.70	0.198

ACTIVE SPACING:

No.	Z depth	Spacing
1	0.00	1.00
2	16.00	1.00

PASSIVE SPACING:

No.	Z depth	Spacing
1	18.00	1.00
2	99.00	1.00

UNITS: Width,Spacing,Diameter,Length,and Depth - ft; Force - kip; Moment - kip-ft
Friction,Bearing,and Pressure - ksf; Pres. Slope - kip/ft3; Deflection - in

Cofferdam EL 10.0 Sediment Surface, EL -4.0 Dredge

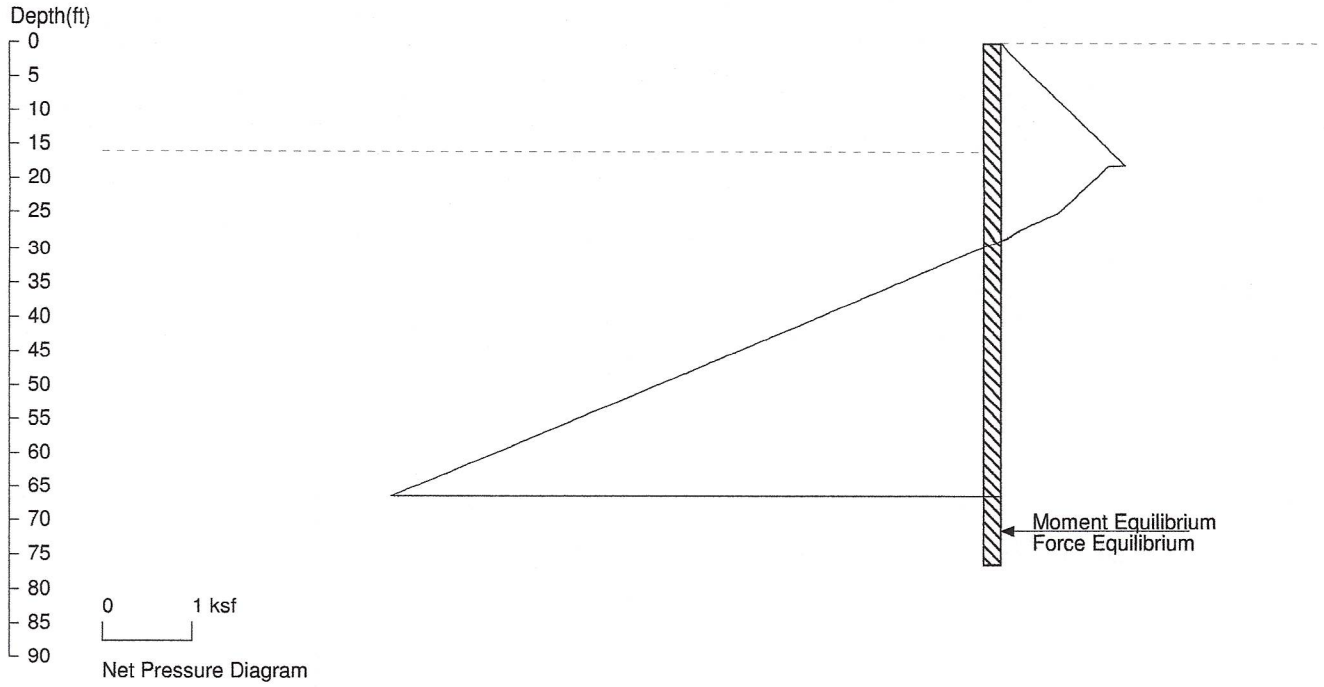

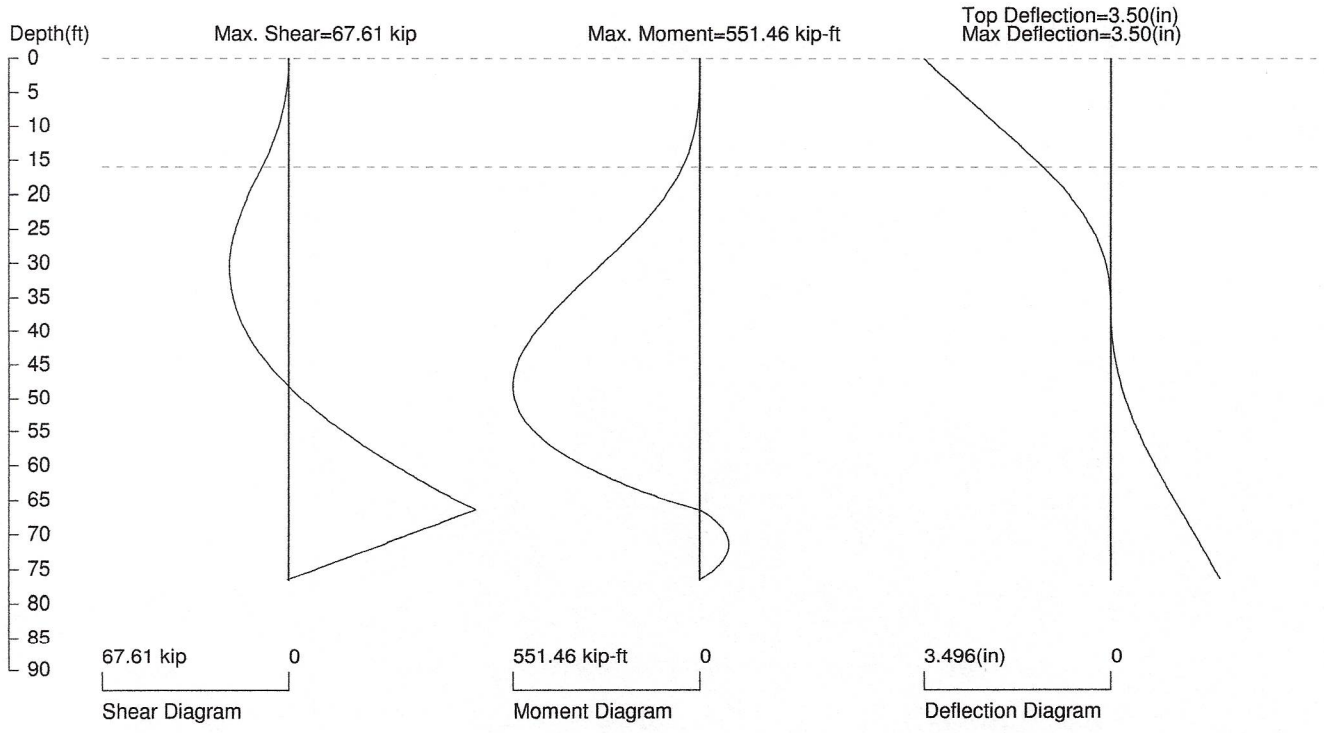

PRESSURE, SHEAR, MOMENT, AND DEFLECTION DIAGRAMS

Based on pile spacing: 1.0 foot or meter

User Input I: E (ksi)=29000.0, I (in4)/foot=2000.0

File: C:\Users\abright\OneDrive - Bright Engineering, Inc\Desktop\LDWMR Calculations\LDWMRCD10.sh8

Cofferdam EL 10.0 Sediment Surface, EL -4.0 Dredge

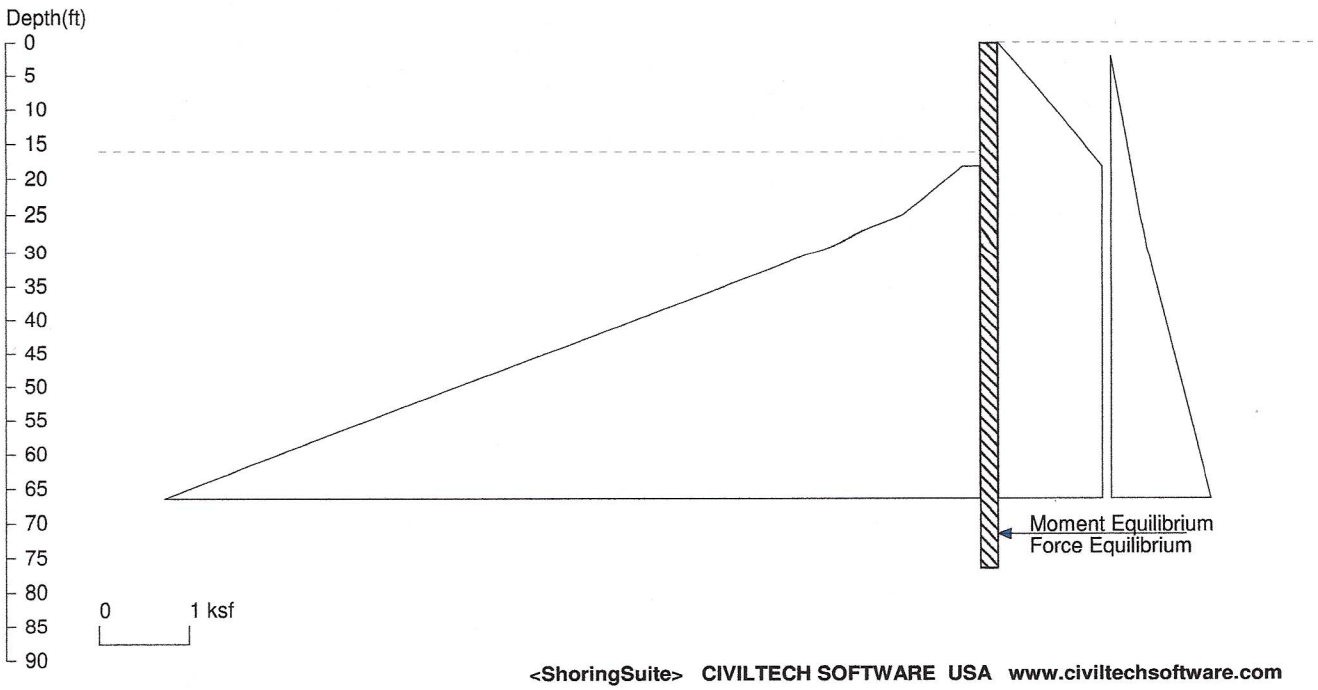

<ShoringSuite> CIVILTECH SOFTWARE USA www.civiltechsoftware.com

Licensed to 4324324234 3424343 Date: 9/21/2025

File: C:\Users\abright\OneDrive - Bright Engineering, Inc\Desktop\LDWMR Calculations\LDWMRCD10DblWall.sh8

Wall Height=16.0 Pile Diameter=1.0 Pile Spacing=1.0 Wall Type: 1. Sheet Pile

PILE LENGTH: Min. Embedment=60.60 Min. Pile Length=76.60
MOMENT IN PILE: Max. Moment=551.46 per Pile Spacing=1.0 at Depth=48.20

PILE SELECTION:
Request Min. Section Modulus = 200.5 in3/ft=10780.62 cm3/m, Fy= 50 ksi = 345 MPa, Fb/Fy=0.66
User Input I (Moment of Inertia):
Top Deflection = 0.07(in) based on E (ksi)=29000.00 and I (in4)/foot=94350.0

DRIVING PRESSURES (ACTIVE, WATER, & SURCHARGE):

Z1	P1	Z2	P2	Slope
0	0	18	1.152	.064
18	1.152	100	1.152	0.000000
2	0	25	0.322	.014
25	.322	100	1.747	.01900

PASSIVE PRESSURES: Pressures below will be divided by a Factor of Safety =1.25

Z1	P1	Z2	P2	Slope
18.0	0.19	25.0	0.86	0.095
25.0	0.86	100.0	15.70	0.198

ACTIVE SPACING:

No.	Z depth	Spacing
1	0.00	1.00
2	16.00	1.00

PASSIVE SPACING:

No.	Z depth	Spacing
1	18.00	1.00
2	99.00	1.00

UNITS: Width,Spacing,Diameter,Length,and Depth - ft; Force - kip; Moment - kip-ft
Friction,Bearing,and Pressure - ksf; Pres. Slope - kip/ft3; Deflection - in

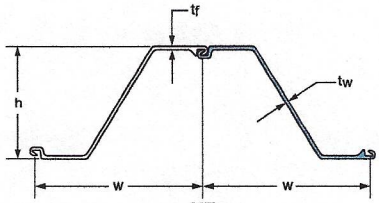

NZ

SECTION	Width (w) in mm	Height (h) in mm	THICKNESS Flange (t_f) in mm	THICKNESS Web (t_w) in mm	Cross Sectional Area in²/ft cm²/m	WEIGHT Single Pile lb/ft kg/m	WEIGHT Wall Area lb/ft² kg/m²	SECTION MODULUS Elastic in³/ft cm³/m	SECTION MODULUS Plastic in³/ft cm³/m	Moment of Inertia in⁴/ft cm⁴/m	COATING AREA Both Sides ft²/ft of single m²/m	COATING AREA Wall Surface ft²/ft² m²/m²
NZ 14	30.31 770	13.39 340	0.375 9.5	0.375 9.5	6.40 135.4	55 81.26	21.77 106.30	25.65 1379	30.50 1640	171.7 23447	6.10 1.86	1.20 1.20
NZ 19	27.56 700	16.14 410	0.375 9.5	0.375 9.5	7.07 149.6	55 81.85	24.05 117.40	35.08 1886	41.33 2222	283.1 38659	6.18 1.88	1.35 1.35
NZ 20	27.56 700	16.16 411	0.394 10.0	0.394 10.0	7.34 155.4	57 85.37	24.82 122.00	36.24 1948	42.80 2301	292.8 39984	6.18 1.88	1.35 1.35
NZ 21	27.56 700	16.20 412	0.433 11.0	0.433 11.0	7.80 165.2	61 90.78	26.56 129.70	38.69 2080	45.85 2465	313.4 42797	6.18 1.88	1.35 1.35
NZ 22	27.56 700.0	16.25 413.0	0.480 12.20	0.480 12.20	8.57 181.4	67 99.71	29.20 142.44	41.47 2230	49.34 2653	336.9 46006	6.18 1.88	1.35 1.35
NZ 26	27.56 700	17.32 440	0.500 12.7	0.500 12.7	9.08 192.2	71 105.66	30.99 151.30	48.50 2608	57.01 3065	419.9 57340	6.49 1.98	1.41 1.41
NZ 28	27.56 700	17.38 441	0.560 14.2	0.560 14.2	9.98 211.2	78 116.08	33.96 165.82	52.62 2829	62.16 3342	457.4 62461	6.49 1.98	1.41 1.41
NZ 38	27.56 700	19.69 500	0.689 17.5	0.500 12.7	11.00 232.9	86 127.99	37.45 182.83	70.84 3809	81.57 4386	697.3 95214	6.58 2.01	1.43 1.43
NZ 40	27.56 700.0	19.73 501.0	0.735 18.70	0.551 14.00	11.77 249.1	92 136.91	40.06 195.59	74.97 4031	86.75 4664	739.6 100997	6.58 2.01	1.43 1.43
NZ 42	27.56 700.0	19.77 502.0	0.769 19.50	0.589 15.0	12.41 262.7	97 144.36	42.24 206.23	78.17 4203	90.80 4881	772.5 105490	6.58 2.01	1.43 1.43

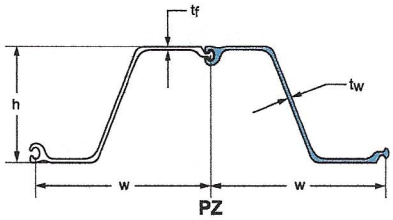

PZ

SECTION	Width (w) in mm	Height (h) in mm	THICKNESS Flange (t_f) in mm	THICKNESS Web (t_w) in mm	Cross Sectional Area in²/ft cm²/m	WEIGHT Single Pile lb/ft kg/m	WEIGHT Wall Area lb/ft² kg/m²	SECTION MODULUS Elastic in³/ft cm³/m	SECTION MODULUS Plastic in³/ft cm³/m	Moment of Inertia in⁴/ft cm⁴/m	COATING AREA Both Sides ft²/ft of single m²/m	COATING AREA Wall Surface ft²/ft² m²/m²
PZ 22	22.00 559	9.0 229	0.375 9.50	0.375 9.50	6.47 136.9	40.3 60.0	22.0 107.4	18.1 973	21.79 1171.4	84.38 11500	4.48 1.37	1.22 1.22
PZ 27	18.00 457	12.0 305	0.375 9.50	0.375 9.50	7.94 168.1	40.5 60.3	27.0 131.8	30.2 1620	36.49 1961.9	184.20 25200	4.48 1.37	1.49 1.49
PZ 35	22.64 575	14.9 378	0.600 15.21	0.500 12.67	10.29 217.8	66.0 98.2	35.0 170.9	48.5 2608	57.17 3073.5	361.22 49300	5.37 1.64	1.42 1.42
PZ 40	19.69 500	16.1 409	0.600 15.21	0.500 12.67	11.77 249.1	65.6 97.6	40.0 195.3	60.7 3263	71.92 3866.7	490.85 67000	5.37 1.64	1.64 1.64